2675

PIONEER®
The future of sound and vision.

Service Manual

• KEH-M9741ZT

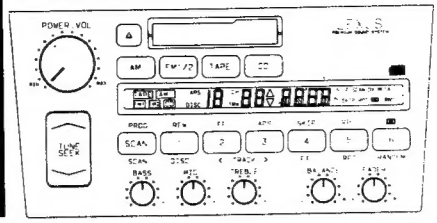

7. Sep. 1989
Scheuer

ORDER NO.
CRT 1232

CAR STEREO

KEH-M9741ZT US
KEH-M9741ZT-91 US
KEH-M9741ZT-02 US
KEH-M9741ZT-92 US
KEH-9641ZT US
KEH-9641ZT-91 US
KEH-9641ZT-02 US
KEH-9641ZT-92 US

• These models have been installed in LEXUS LS400.

Model	Supplementary Model	Part No.	ID No.	Remark
KEH-M9741ZT	KEH-M9741ZT-91	86120-50040	P626	Leather
KEH-M9741ZT-02	KEH-M9741ZT-92	86120-50030	P625	Moquette
KEH-9641ZT	KEH-9641ZT-91	86120-50020	P624	Leather
KEH-9641ZT-02	KEH-9641ZT-92	86120-50010	P623	Moquette

Note:

- **See the separate manual CX-156 (CRT-468) for the cassette mechanism description.**

- **Dolby and the double-D symbol are trademarks of Dolby Laboratories Licensing Corporation.**
- **Noise Reduction System manufactured under license from Dolby Laboratories Licensing Corporation.**

PIONEER ELECTRONIC CORPORATION 4-1, Meguro 1-Chome, Meguro-ku, Tokyo 153, Japan
PIONEER ELECTRONICS SERVICE INC. P.O. Box 1760, Long Beach, California 90801 U.S.A.
PIONEER ELECTRONICS OF CANADA, INC. 505 Cochrane Drive, Markham, Ontario L3R 8E3 Canada
PIONEER ELECTRONIC [EUROPE] N.V. Keetberglaan 1, 2740 Beveren, Belgium
PIONEER ELECTRONICS AUSTRALIA PTY. LTD. 178-184 Boundary Road, Braeside, Victoria 3195, Australia TEL: [03] 580-9911

© PIONEER ELECTRONIC CORPORATION 1989

FD JUNE 1989 Printed in Japan

• These models are used in combination with following models.

Car Stereo	CD Player	Amplifier
KEH-M9741ZT	CDX-M9741ZT	GM-9641ZT
KEH-M9741ZT-02	CDX-M9741ZT	GM-9641ZT
KEH-9641ZT	————	GM-9641ZT
KEH-9641ZT-02	————	GM-9641ZT

• KEH-M9741ZT-91, KEH-M9741ZT-92, KEH-9641ZT-91 and KEH-9641ZT-92 are the model number of an optional supplementary models.
These are indentical to the KEH-M9741ZT, KEH-M9741ZT-02, KEH-9641ZT and KEH-M9641ZT-02 except for the addition of following items.

	KEH-M9741ZT-91	KEH-M9741ZT-92	KEH-9641ZT-91	KEH-9641ZT-92
Corton	CHG1628	CHG1627	CHG1630	CHG1629
Contain Box				
Styrofoam(Upper)	CHP1157	CHP1157	CHP1157	CHP1157
Styrofoam(Lower)	CHP1158	CHP1158	CHP1158	CHP1158
Polyethylene Bag				

CONTENTS

1. SPECIFICATIONS 3
2. CONNECTOR FUNCTION DESCRIPTION 4
3. DISASSEMBLY 5
4. ANTI-THEFT SECURITY SYSTEM 8
5. GENERAL GUIDE 12
6. CIRCUIT DESCRIPTION 15
7. EXTENSION CABLE GUIDE 22
8. ADJUSTMENT 23
9. OVER ALL SCHEMATIC DIAGRAM 47
10. SCHEMATIC DIAGRAM AND P.C. BOARD PATTERNS 51
11. CHASSIS EXPLODED VIEW (1) 86
12. CHASSIS EXPLODED VIEW (2) 89
13. CASSETTE MECHANISM ASSY EXPLODED VIEW 92
14. ELECTRICAL PARTS LIST 95

1. SPECIFICATIONS

General
Power sourse ..... 13.2V (10.6—16.0V allowable)
Grounding system ..... Negative type
Dimensions
(Chassis) ..... 178 (W) × 109 (H) × 155 (D) mm
[7 (W) × 4-1/4 (H) × 6-1/8 (D) in.]
(Nose) ..... 226 (W) × 109 (H) × 30 (D) mm
[8-7/8 (W) × 4-1/4 (H) × 1-1/4 (D) in.]
Weight ..... 2.8kg (6.2 lbs)

Amplifier
Maximum power output ..... 20W×4
Load impedance 4Ω
Tone Controls
(Bass) ..... ±10dB (100Hz)
(Mid) ..... ±10dB (1kHz)
(Treble) ..... ±10dB (10kHz)

Tape player
Tape ..... Compact cassette tape (C30-C90)
Tape speed ..... 4.76 cm/sec. (+0.14 cm/sec., -0.05 cm/sec.)
Wow & flutter ..... Less than 0.15% (WRMS)
Crosstalk ..... More than 40 dB
Stereo separation ..... More than 30 dB
Signal-to-noise ratio
Dolby NR IN ..... More than 45 dB
Dolby NR OUT ..... More than 40 dB
FM tuner
Frequency range ..... 87.9-107.9 MHz
Usable sensitivity ..... 15±6dBμV
Signal-to-noise ratio ..... More than 48 dB
Distortion ..... Less than 1.5%
Stereo separation ..... More than 25 dB

AM tuner
Frequency range ..... 530-1710 kHz
Usable sensitivity ..... 25±6dBμV
Usable selectivity ..... More than 30dB (±9kHz)
Signal-to-noise ratio ..... More than 40 dB

2. CONNECTOR FUNCTION DESCRIPTION

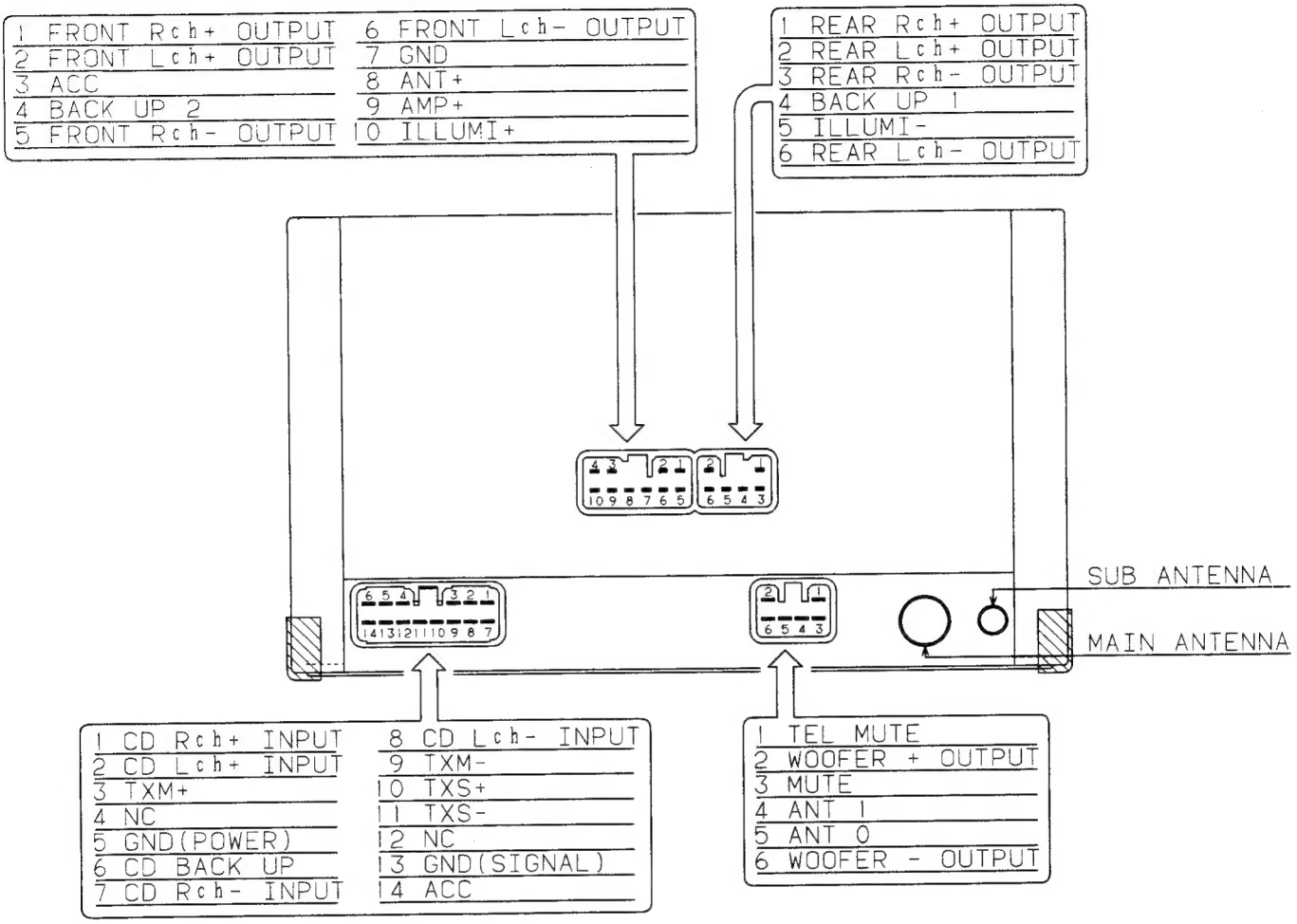

Fig. 1

3. DISASSEMBLY

• Removing the Cover

1. Insert and turn a flat screwdriver to remove the cover.
2. Raise the cover to remove.

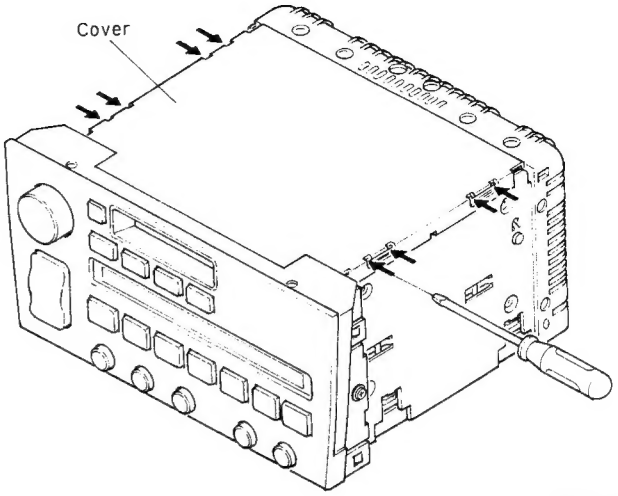

Fig. 2

• Removing the Cassette Mechanism Assy

1. Remove the four screws, and then remove the holder.
2. Disconnect the connector, and then raise the cassette mechanism assy.

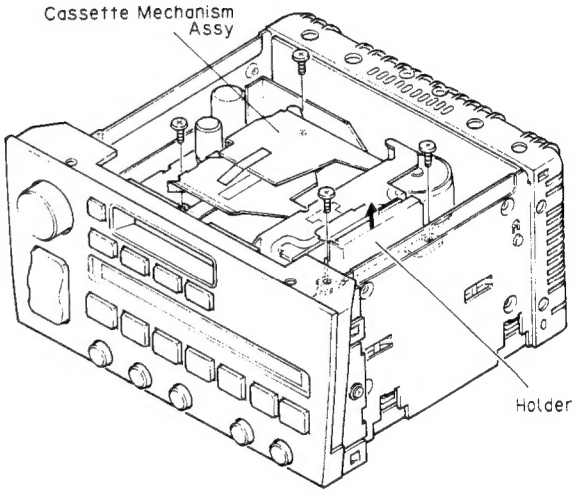

Fig. 3

• Removing the Grille Assy

1. Disconnect the connector, and then remove the two screws A.
2. Disengage the stopper at four locations indicated by arrows.

• Removing the Power Amp Section

1. Remove the four screws B.
2. Disengage the stopper at two locations indicated by arrows.
3. Raise the power amp P.C. board.

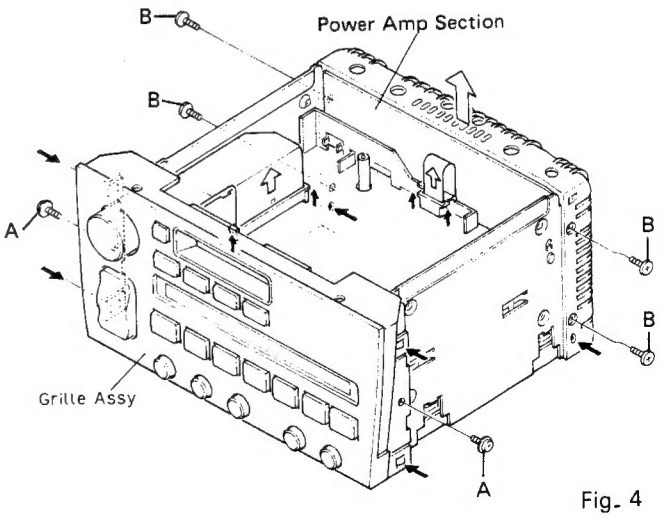

Fig. 4

• Removing the Control Unit

1. Disconnect the two connectors.
2. Remove the four screws.
3. Remove the control unit.

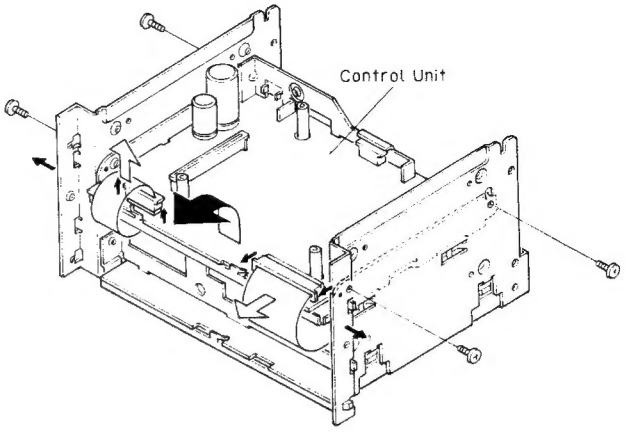

Fig. 5

• Removing the Heat Sink

1. Remove the screw C and four screws D.
2. Remove the heat sink.

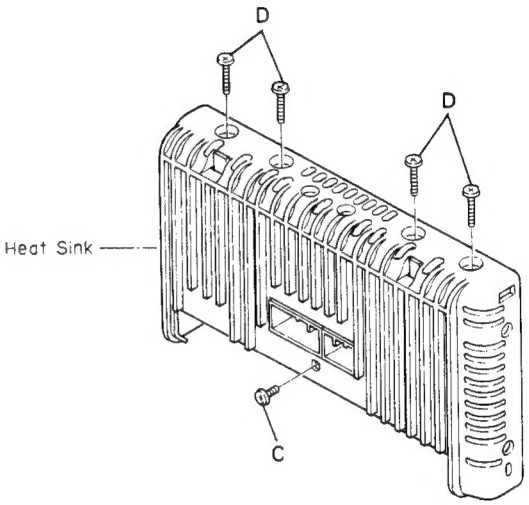

Fig. 6

• Removing the Communication Unit (KEH-M9741ZT, KEH-M9741ZT-02)

1. Disconnect the two connectors.
2. Remove the three screws, and then remove the communication unit.

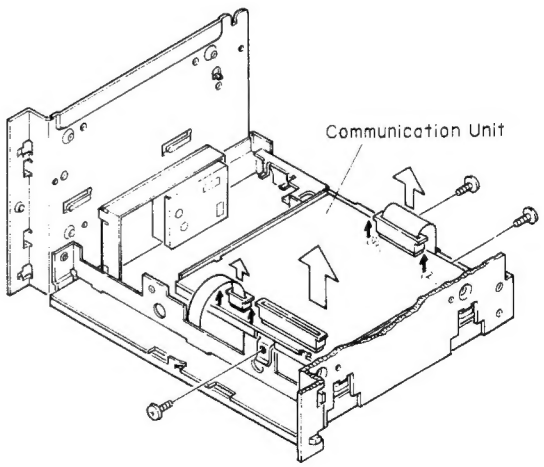

Fig. 7

• Removing the Tuner P.C. Board

1. Remove the two screws, and then remove the side panels.
2. Remove the solder at location indicated by arrow.
3. Straighten the claw, and then remove the tuner P.C. board.

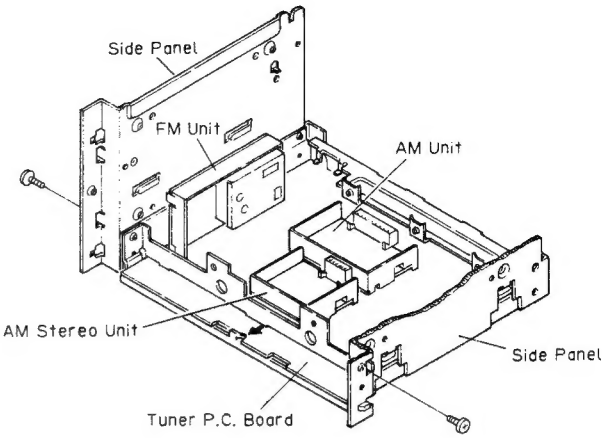

Fig. 8

• Removing the FM Unit, AM Unit and FM Stereo Unit

1. Remove the solder at location indicated by arrows.
2. Straighten the claws.
3. Remove the each units.

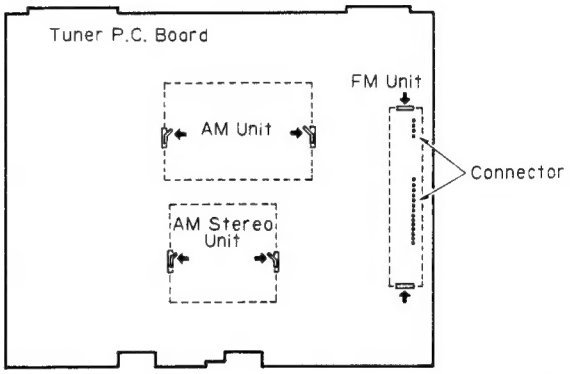

Fig. 9

• Removing the Key Board Unit, Volume P.C. Board A and Volume P.C. Board B

1. Disconnect the two connectors.
2. Remove the twelve screws.
3. Remove the each units.

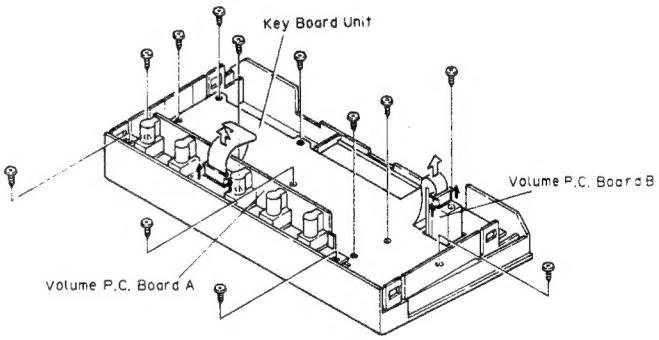

Fig. 10

4. ANTI-THEFT SECURITY SYSTEM

4.1 HOW TO INPUT THE THREE DIGIT SECURITY SYSTEM CODE

1. ACCESS MODE

First...
BE SURE THAT:

- the radio unit is turned off
- the ignition switch is in **"ACC"**

Then...
HOLD the "1 [REW]" and "6 [▯◯]" buttons, and simultaneously PUSH and HOLD the "POWER. VOL" knob in, until **"SEC"** appears, then release buttons.

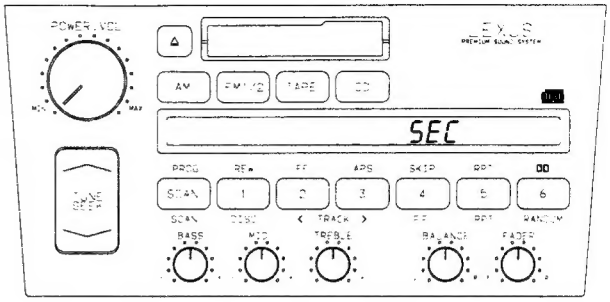

Fig. 11

2. READY MODE

PRESS and HOLD the "TUNE [∧]" button in and PRESS the "1 [REW]" button. The display will read "▲ ———".

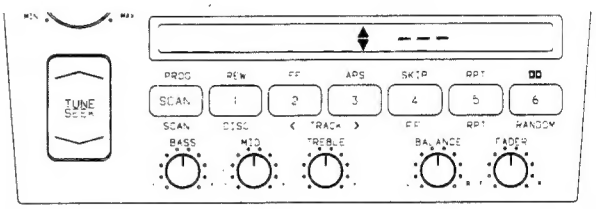

Fig. 12

3. INPUT MODE

Note: User has up to ten seconds to input each digit.

Now you're ready to input a three digit Identification Number.

To set the **first** ID digit:

- PRESS "1 [REW]" repeatedly until the desired number appears on the display

To set the **second** ID digit:

- PRESS "2 [FF]" repeatedly until the desired number appears on the display

To set the **third** ID digit:

- PRESS "3 [APS]" repeatedly until the final desired number appears on the display

EXAMPLE: If the desired ID number is 314, you'd press "1 [REW]" four times, press "2 [FF]" twice, and press "3 [APS]" five times. (Code digits range zero through nine.)

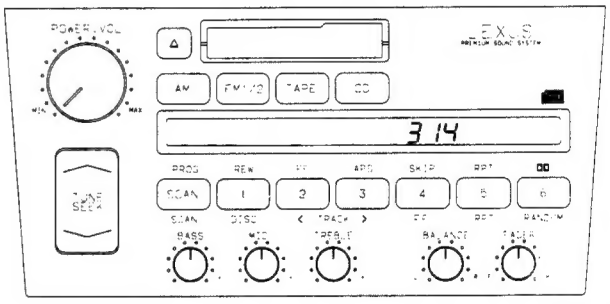

Fig. 13

4. SET MODE

With the ID number now appearing on the display:

- PRESS the "SCAN [PROG]" button and HOLD it in until **"SEC"** appears for a few seconds, then it will **GO DARK.**

NOTE: 1) CREATE AN ID NUMBER EASY TO REMEMBER
2) KEEP ID NUMBER IN A RELIABLE PLACE
3) DON'T LEAVE ID NUMBER IN THE VEHICLE!

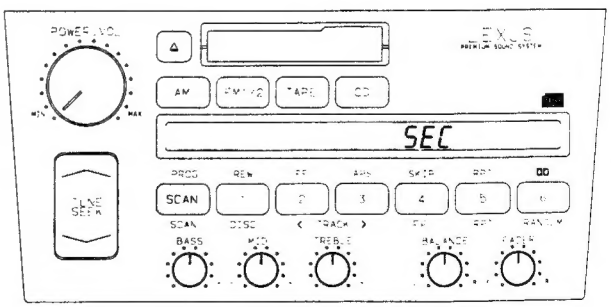

Fig. 14

4.2 HOW TO CHANGE THE THREE DIGIT SECURITY SYSTEM CODE

1. ACCESS MODE

First...
BE SURE THAT:

- the radio unit is turned off
- the ignition switch is in **"ACC"**

Then...
HOLD the "1 [REW]" and "6 [▯◀]" buttons, and simultaneously PUSH and HOLD the "POWER. VOL" knob in, until **"SEC"** appears, then release buttons.

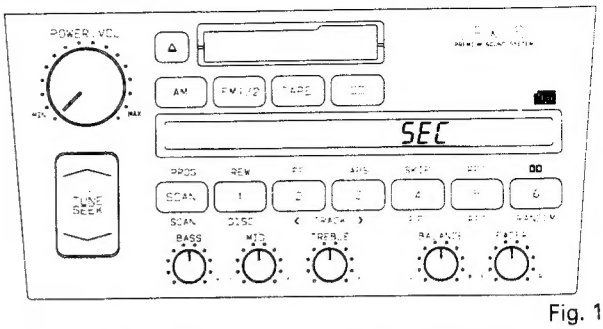

Fig. 15

2. READY MODE

PRESS and HOLD the "TUNE [∧]" button in and PRESS the "1 [REW]" button. The display will read "▲▼ ---".

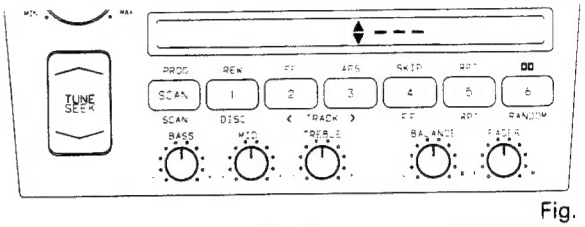

Fig. 16

3. INPUT MODE

Input existing three digit ID numbers.

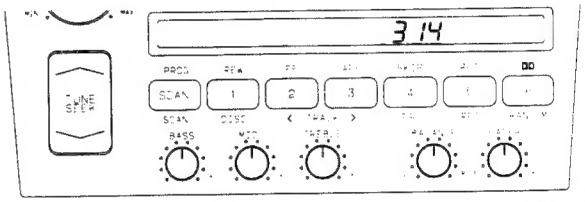

Fig. 17

4. SET MODE

Then, push "SCAN [PROG]." The display will now read "---" continuously.
* (**"ERR"** See "ERROR MESSAGE")

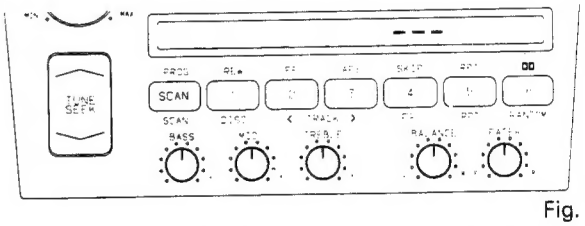

Fig. 18

5. READY MODE

PUSH "TUNE [∧]" and "1 [REW]" simultaneously. The display will read "▲▼ ---".

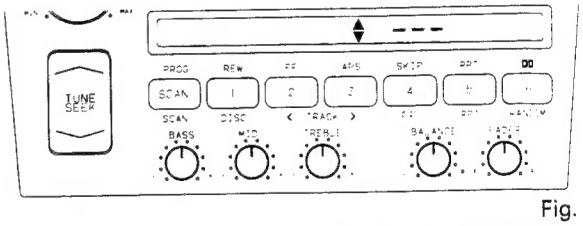

Fig. 19

6. INPUT MODE

Now you're ready to input a new three digit Identification Number.

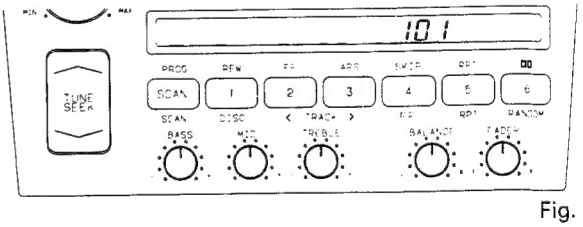

Fig. 20

7. SET MODE

With the ID number now appearing on the display:

- PRESS the "SCAN [PROG]" button and HOLD it in until **"SEC"** appears for a few seconds, then it will **GO DARK.**

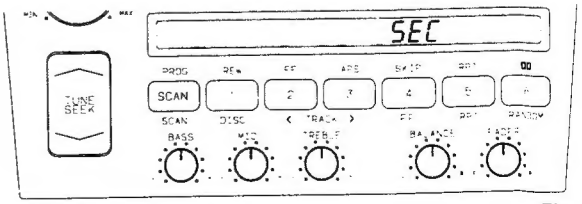

Fig. 21

4.3 HOW TO CLEAR THE SECURITY CODE

1. ACCESS MODE

First...

BE SURE THAT:

- the radio unit is turned off
- the ignition switch is in **"ACC"**

Then...

HOLD the "1 [REW]" and "6 [▯◯]" buttons, and simultaneously PUSH and HOLD the "POWER. VOL" knob in, until **"SEC"** appears, then release buttons.

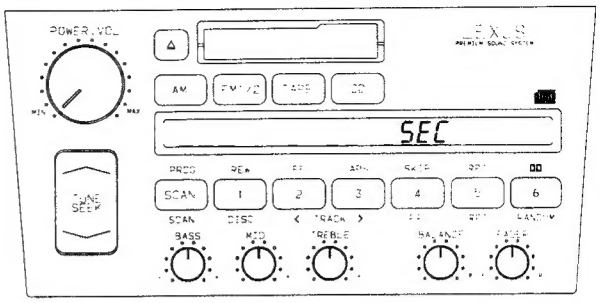

Fig. 22

2. READY MODE

PRESS and HOLD the "TUNE [∧]" button in and PRESS the "1 [REW]" button. The display will read "▲▼ ———".

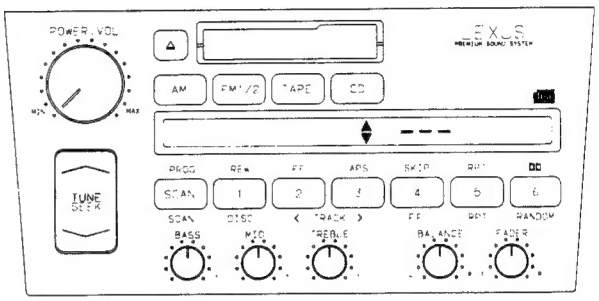

Fig. 23

3. INPUT MODE

Input existing three digit ID numbers.

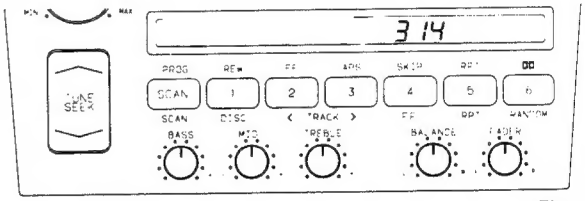

Fig. 24

4. SET MODE

Then, push "SCAN [PROG]." The display will now read "———" continuously.

* (**"ERR"** See "ERROR MESSAGE")

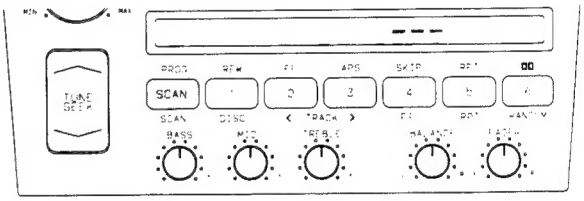

Fig. 25

5. WAIT for ten seconds. The security system clears itself and the display will **GO DARK.**

* (The security code should be cleared when the vehicle is resold.)

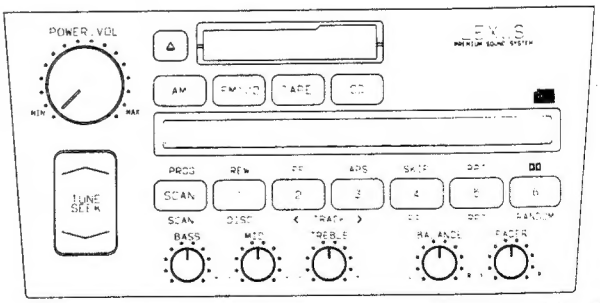

Fig. 26

4.4 HOW TO REACTIVATE A DISABLED ETR

1. If the power is disconnected by an attempted theft or loss of battery power, the display will read **"SEC"** continuously when the key is "on." Also, when the ignition key is turned to ACC, none of the ETR functions will function.

2. READY MODE

PRESS and HOLD the "TUNE [∧]" button in and PRESS the "1 [REW]" button. The display will read "▲▼ ———".

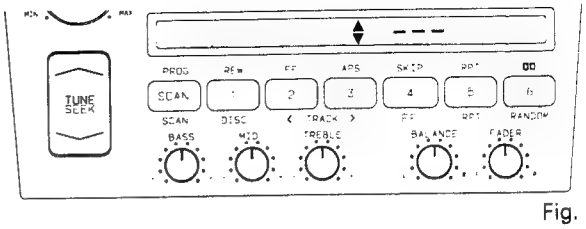

Fig. 27

3. INPUT MODE

Now you're ready to input the existing three digit Identification Number.

To set the **first** ID digit:
- PRESS "1 [REW]" repeatedly until the desired number appears on the display

To set the **second** ID digit:
- PRESS "2 [FF]" repeatedly until the desired number appears on the display

To set the **third** ID digit:
- PRESS "3 [APS]" repeatedly until the final desired number appears on the display

EXAMPLE: If the desired ID number is 314, you'd press "1 [REW]" four times, press "2 [FF]" twice, and press "3 [APS]" five times. (Code digits range zero through nine.)

Note: User has up to ten seconds to input each digit.

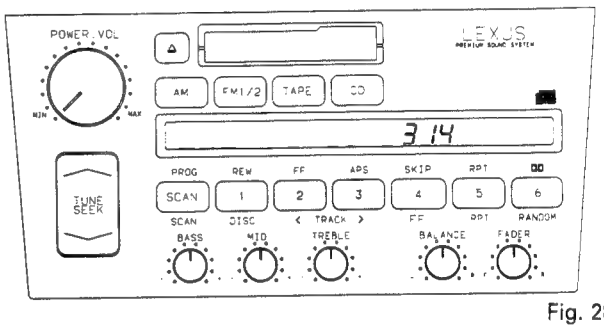

Fig. 28

4. SET MODE

With the ID number now appearing on the display:

- PRESS the "SCAN [PROG]" button and HOLD it in until **"SEC"** appears for a few seconds, then it will **GO DARK.**

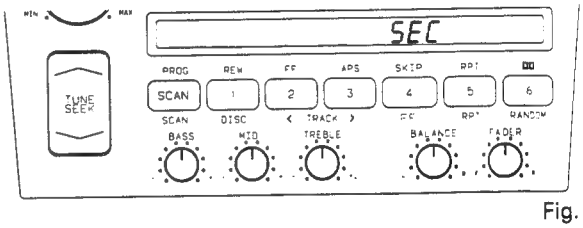

Fig. 29

ERROR MESSAGE

If the wrong buttons are pushed, **"Err"** will appear before **"SEC"** appears. Go back to Step 2 and try again. Or, if the display returns to "▲▼ ———" during your input, try again from Step 3. BUT:

BE CAREFUL! On the fifth wrong input, the ETR unit goes dead and must be reactivated by an authorized service station.

TO VERIFY that the ID number has been accepted as the security code, turn the key "off," then turn it back on, **"SEC"** should appear. Once the anti-theft system is properly set, **"SEC"** will appear on the display each time the ignition key is turned to **"ACC"** after being off.

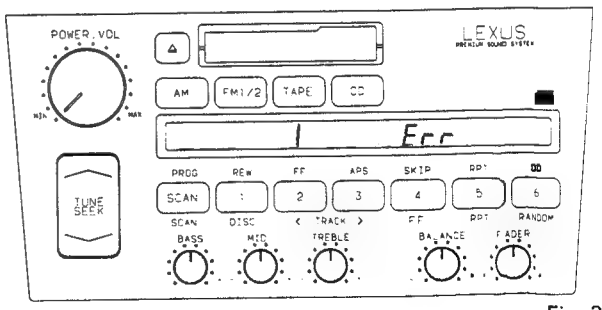

Fig. 30

5. GENERAL GUIDE

5.1 RADIO

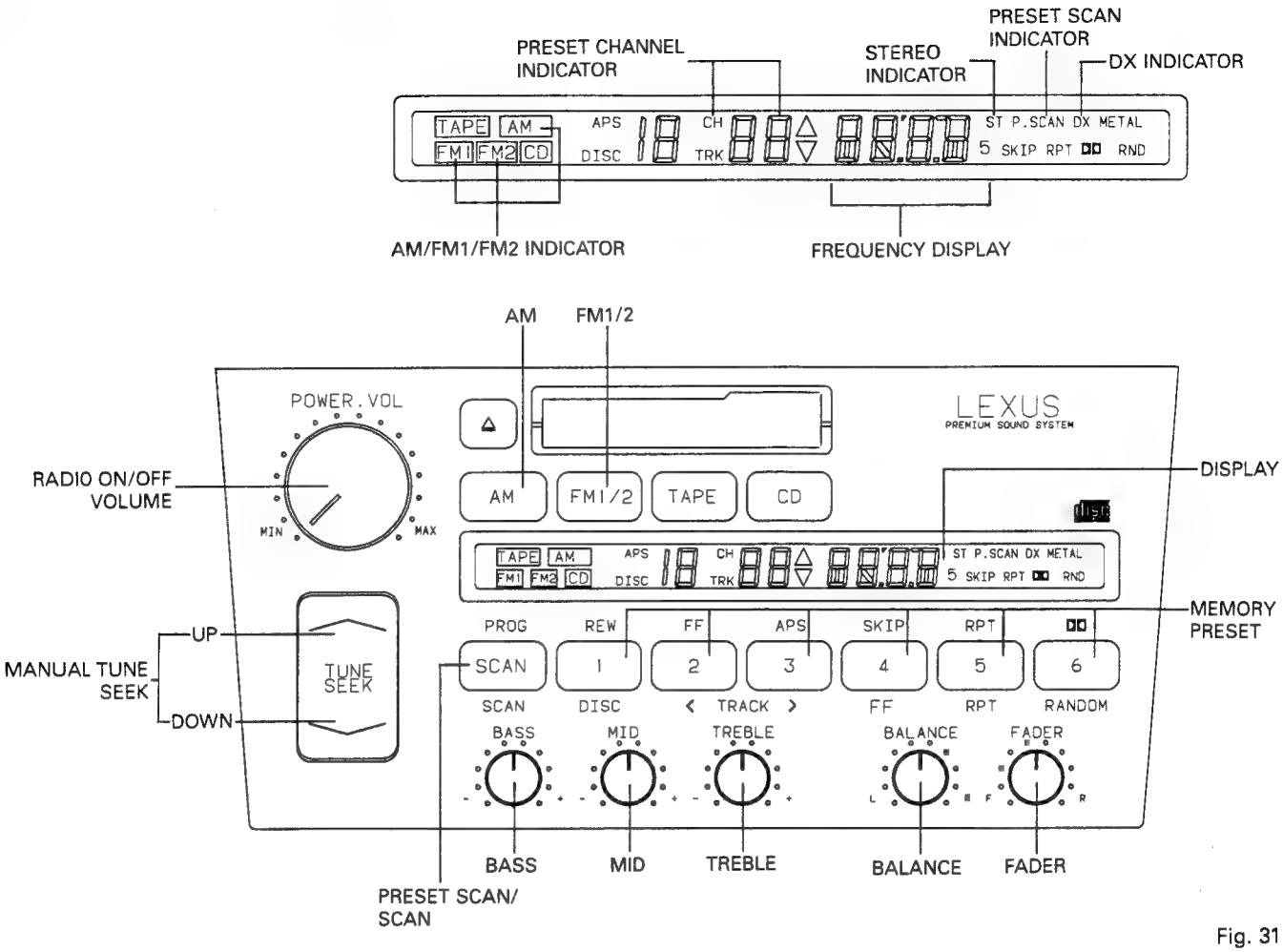

Fig. 31

● Manual/Seek Tuning:

When the ∧ (up) side of the TUNE button is pressed, the frequency is increased by 2 MHz in the FM band and by 10 kHz in the AM band, and when the v (down) side is pressed, the frequency is decreased in the same way. Holding the button depressed for more than 0.5 seconds starts seek tuning, which stops when a station broadcasting a sufficiently strong signal is received.

When only weak signals or no station is received, the frequency returns to the initial frequency, then the reception is changed to the DX mode.

● Memory Preset:

(1) Select the required band among the FM1, FM2, and AM bands.

(2) Tune to the broadcast station required to be stored in memory.

(3) Press and hold one of the Memory Preset button for about 2 seconds.

(4) A beep tone will be heard when the tuned station is stored in the memory corresponding to the Memory Preset button pressed.

(5) Up to six stations can be memorized for each of the FM1, FM2 and AM bands.

● Preset Scan/Scan Tuning:

When the SCAN button is pressed, all the stations stored in the Memory Preset buttons will be received for 5 seconds in sequence.

When the SCAN button is held pressed for more than 2 seconds, the Scan Tuning mode is activated and station broadcasting strong signals will be received for 5 seconds in sequence. When the tuning returns to the frequency from which the Scan Tuning was started, the receiving mode is changed to the DX mode.

To release Preset Scan or Scan Tuning, press the SCAN button again.

5.2 TAPE

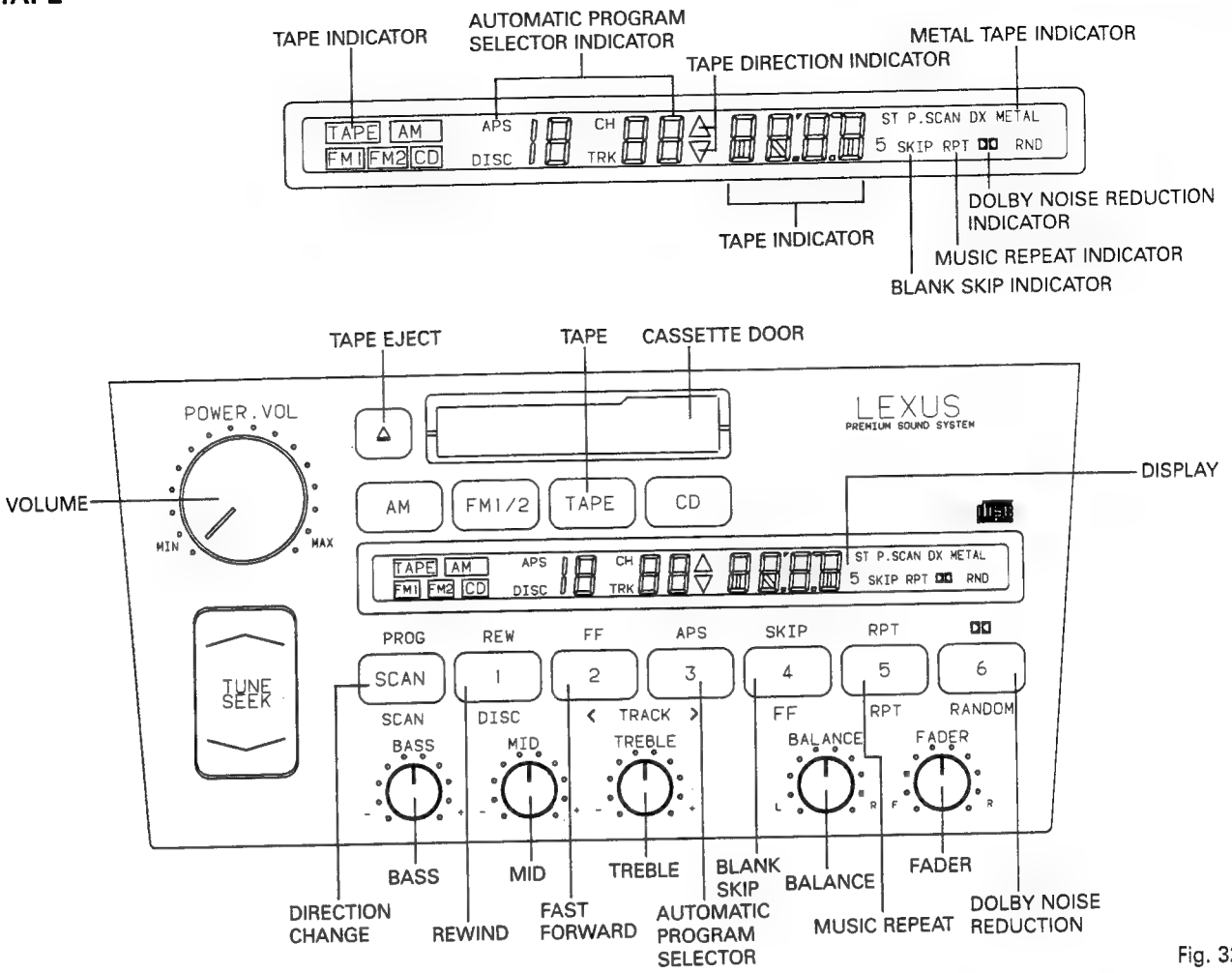

Fig. 32

● Rewind/Fast Forward:

Press the REW (or FF) button to rewind (fast-forward) the tape, and press it again to release the function.

● APS:

With the APS button, the beginning of any required tune up to 9 tunes before and after the current tune can be detected automatically. After pressing the APS button the number of times corresponding to the number of the tune to which you want to skip (for three times to select the 3rd tune), press the FF button to search in the forward direction or press the REW button to search in the reverse direction. The tape will stop at the beginning of the designated tune and play starts automatically.

(For example)

When the FF button is pressed after pressing the APS button three times, the tape is fast-forward by skipping two tunes in the forward direction, and play will start from the beginning of the 3rd tune.

● Blank Skip:

With the SKIP button pressed ON, when a blank (non-recorded) section of more than 15 seconds is detected, the tape is fast-forwarded to the beginning of the next tune. When the SKIP button is pressed again, the Blank Skip function is released.

● Music Repeat:

With the RPT button pressed ON, when the current tune is finished, the tape will be rewound to the beginning of the tune and play will restart automatically. When the RPT button is pressed again, the Music Repeat function is released.

● Dolby Noise Reduction*

Press this button when using a tape recorded with the Dolby (B type) Noise Reduction system. Press the button again to release it.

** Noise reduction system manufactured under license from Dolby Laboratories Licensing Corporation.*

Dolby and the double-D symbol are trademarks of Dolby Laboratories Licensing Corporation.

● Ejecting Tape:

The tape can be ejected at any time by pushing the TAPE EJECT button.

5.3 CD

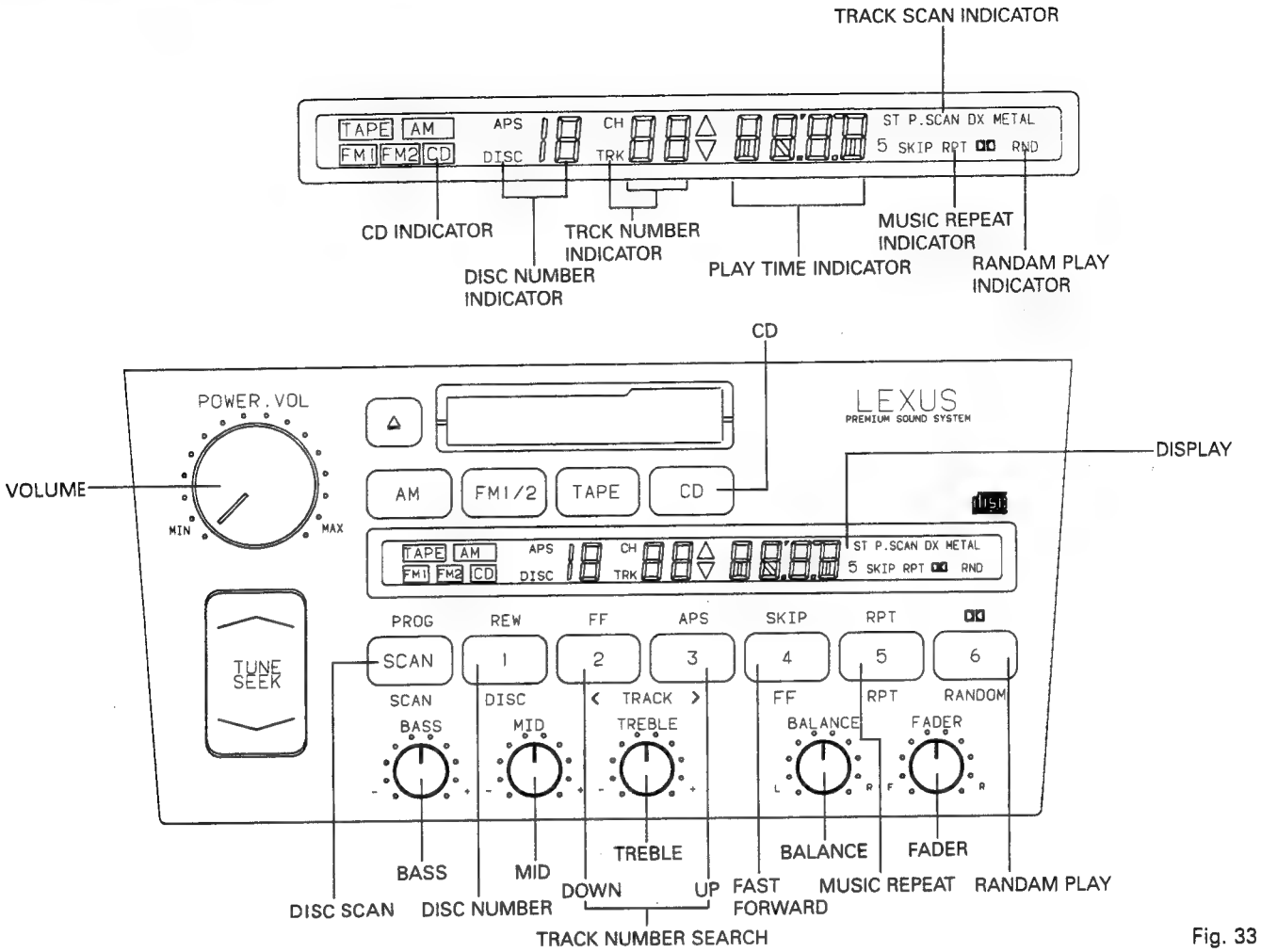

Fig. 33

● Changing the Discs:

When the DISC button is pressed, the disc number is counted up, and the disc designated by the DISC button will be played. When the DISC button is held pressed for more than 0.5 seconds, the disc number is counted up continuously. If a tray with no disc in the magazine loaded in the CD changer is selected, the corresponding disc number will not be displayed.

● Track Search:

When the TRACK < button is pressed, the track number is counted down and the designated track will be played. When the TRACK < button is held pressed for more than 0.5 seconds, the track number will be counted down continuously.

When the TRACK > button is pressed, the track number is counted up and the designated track will be played. When the TRACK > button is held pressed for more than 0.5 seconds, the track number will be counted up continuously.

● Fast Forward:

The playing position is fast-forwarded while the FF button is pressed. During fast-forwarding, playback sound can be heard.

● Music Repeat:

When the RPT button is pressed, the current track will be played repeatedly. Press the RPT button again to release the Music Repeat function.

● Random Play:

When the RANDOM button is pressed, the track to be played next will be selected automatically by the built-in microcomputer.

● Disc Scan:

When the SCAN button is pressed, the beginning of all the tracks on the discs loaded in the CD changer will be played for 10 seconds in sequence. When play returns to the disc from which Track Scan was started, Track Scan will be released. To release the Track Scan function during its operation, press the SCAN button again.

6. CIRCUIT DESCRIPTION

6.1 DATA COMMUNICATIONS

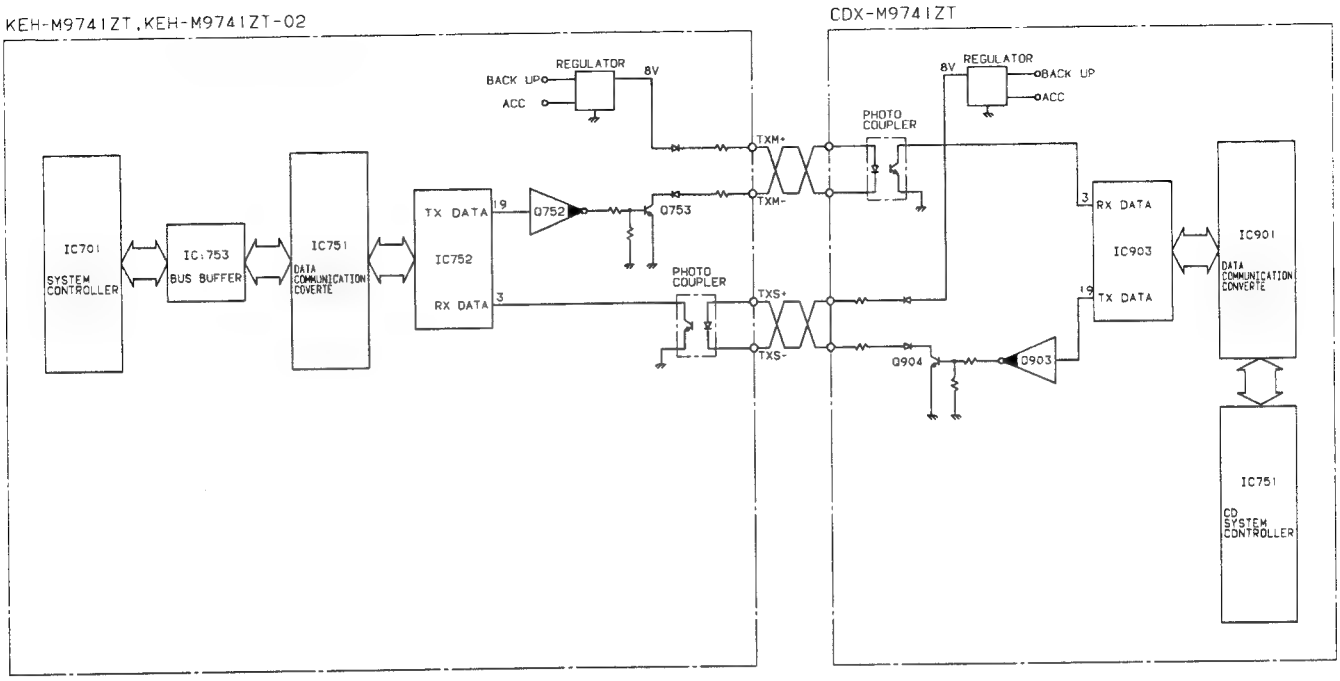

Fig. 34

● Communication Interface for Operation Control

1) Communication specifications

Synchronization:	Asynchronous
Baud rate:	4800 bps
Start bit length:	1 bit
Data bit length:	8 bit
Parity bit:	Even
Signal level:	ON +8 V, OFF 0 V
Communication method:	Half-duplex

2) Transmission control system
Polling, system selection by master station

3) Signal terminal specifications

Pin name		Definition	Signal direction
① TXM+	:	Master transmission power supply (+8 V)	Master → Slave
② TXM−	:	Master transmission output (open collector)	Master → Slave
③ TXS+	:	Master receiving input (positive)	Master ← Slave
④ TXS−	:	Master receiving input (negative)	Master ← Slave

- **Data Format**

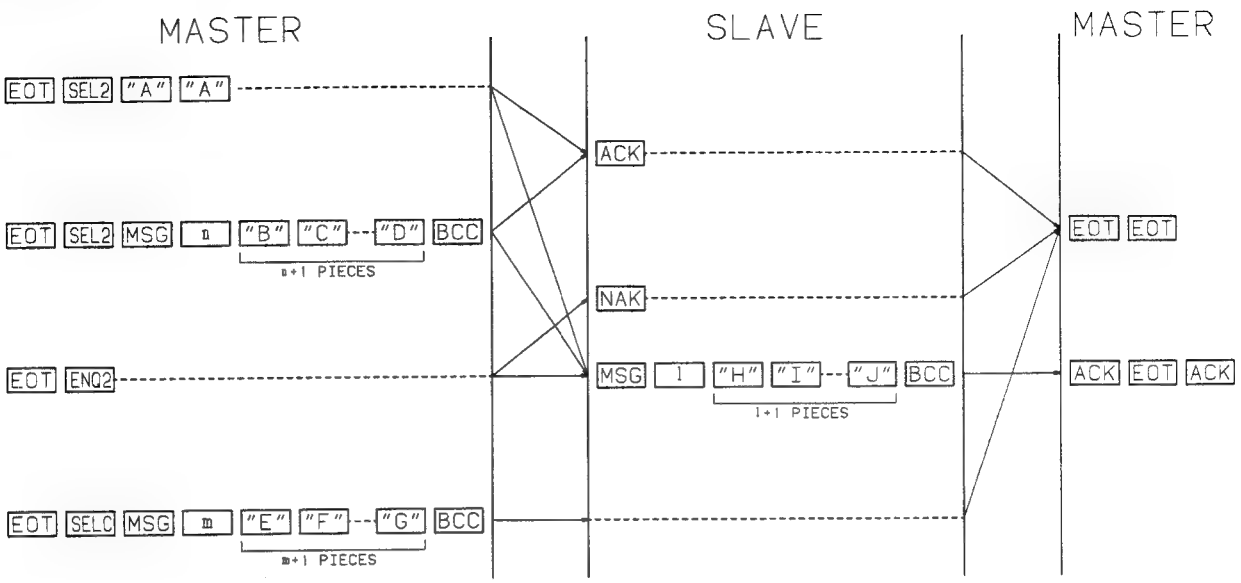

NOTE:
"A","B",....."J":COMMAND,CONDITION,DATA OF INDICATION
BCC:ERROR CHECK
l,m,n:NUMBER OF DATA
THE OTHERS:COMMUNICATION CONTROL CODE

Fig. 35

- **Communication Timing Chart**

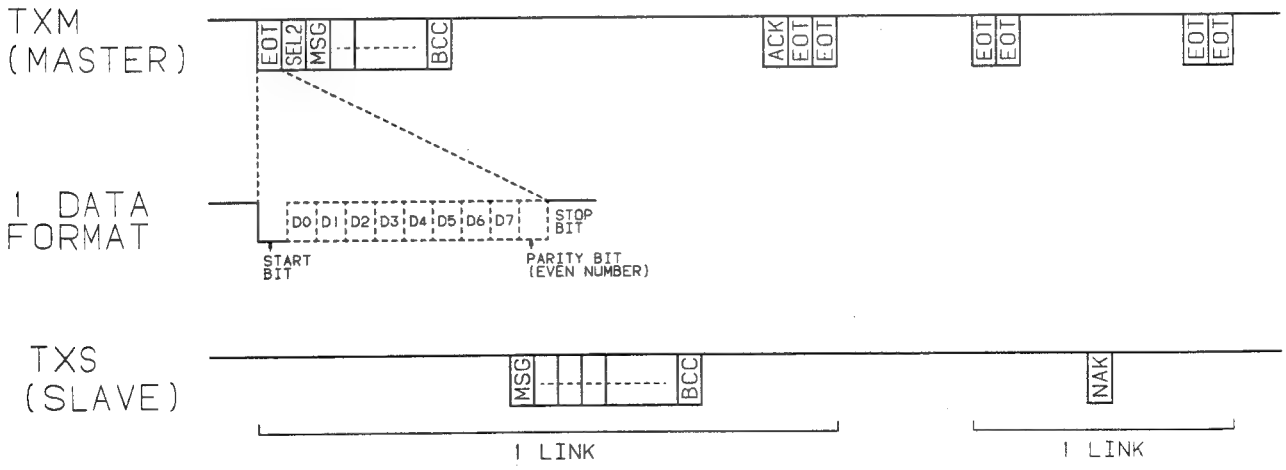

Fig. 36

6.2 FM DIVERSITY SYSTEM

The system incorporates two antennas and one tuner. Noise elements in the signal meter voltage are detected, and whenever noise is present the levels of the two antennas are compared. The antenna with the higher level is selected.

System Block Diagram

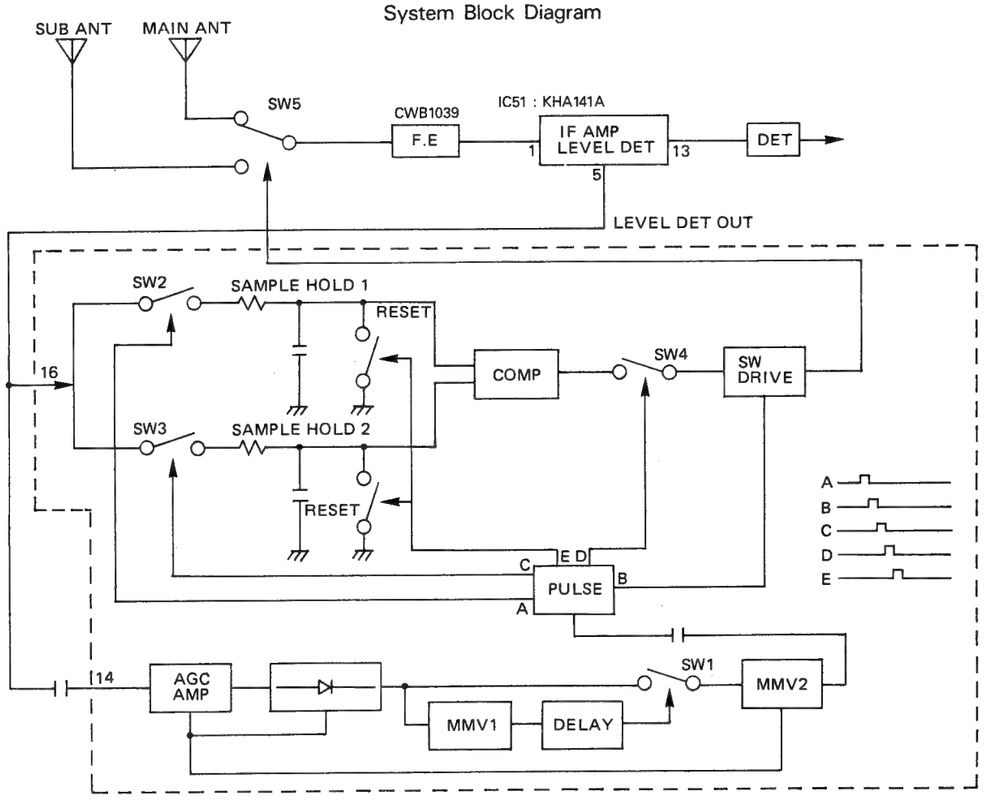

Fig. 37

Noise due to multipath distortion, etc. appears in the LEVEL DET OUT signal from pin 5 of IF IC KHA141A. The noise passes through a capacitor and is supplied to the AGC amplifier where it is amplified. Then it is rectified. This signal is then supplied to MMV1. After being delayed by approximately 40 — 50 μsec. in the next delay circuit, it closes SW1 for a few μsec. (determined by MMV1). If new noise is generated while SW1 is closed, this noise is supplied to MMV2. After wave shaping, it is supplied to the pulse generation circuit.
The pulse generation circuit generates in sequence pulses A – E shown in the figure.

A is supplied to SW2, and sample and hold is performed on the ANT level for the signal being received at that point. B is supplied to SW DRIVE and the antenna is switched. C is supplied to SW3, and sample and hold is performed on the antenna input level after ANT was switched. D is supplied to SW4, closing it. The sample-and-hold 1 and 2 comparison output is sent to SW DRIVE.
At this point, if the ANT input level from before the switch is higher, ANT is switched back to the original antenna. If the ANT input level after the switch is higher, ANT remains connected to the current antenna. As described above, whenever noise is supplied to MMV2, the input levels of the two antennas are compared and the antenna with the higher level input is chosen.

6.3 MOTOR ANTENNA CONTROL

Radio Status	ANT (+)	ANT (0)	ANT (1)	ANTENNA POSITION
OFF	L	L	L	With antenna shortened
During cassette or CD play	L	L	L	〃
During AM broadcast reception	H	H	H	Long
During FM broadcast reception (87.9 – 96 MHz)	H	H	L	Medium
During FM broadcast reception (96.1 – 107.9 MHz)	H	L	L	Short
During AM seek or scanning	H	H	H	Long
During FM seek or scanning (Starts from 87.9 – 96 MHz)	H	H	L	Medium
During FM seek or scanning (Starts from 96.1 – 107.9 MHz)	H	L	L	Short

6.4 ELECTRONIC VOLUME

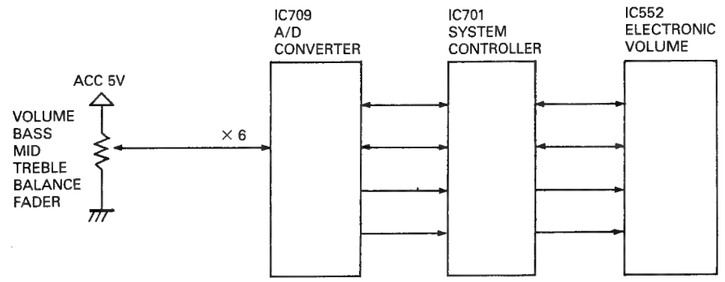

Fig. 38

In this unit, an electronic volume control circuit in IC552 is controlled by serial data. For operation of the electronic volume control circuit, the midpoint voltages of six variable resistors — VOLUME, BASS, MID, TREBLE, BALANCE and FADER — according to the rotation angles of the VRs are transmitted to IC709 in which analog signals are converted into digital signals. Then, the signal is converted into serial data in IC701, and applied to IC552 to be used for controlling the electronic volume control circuit in IC552.

6.5 BLOCK DIAGRAM

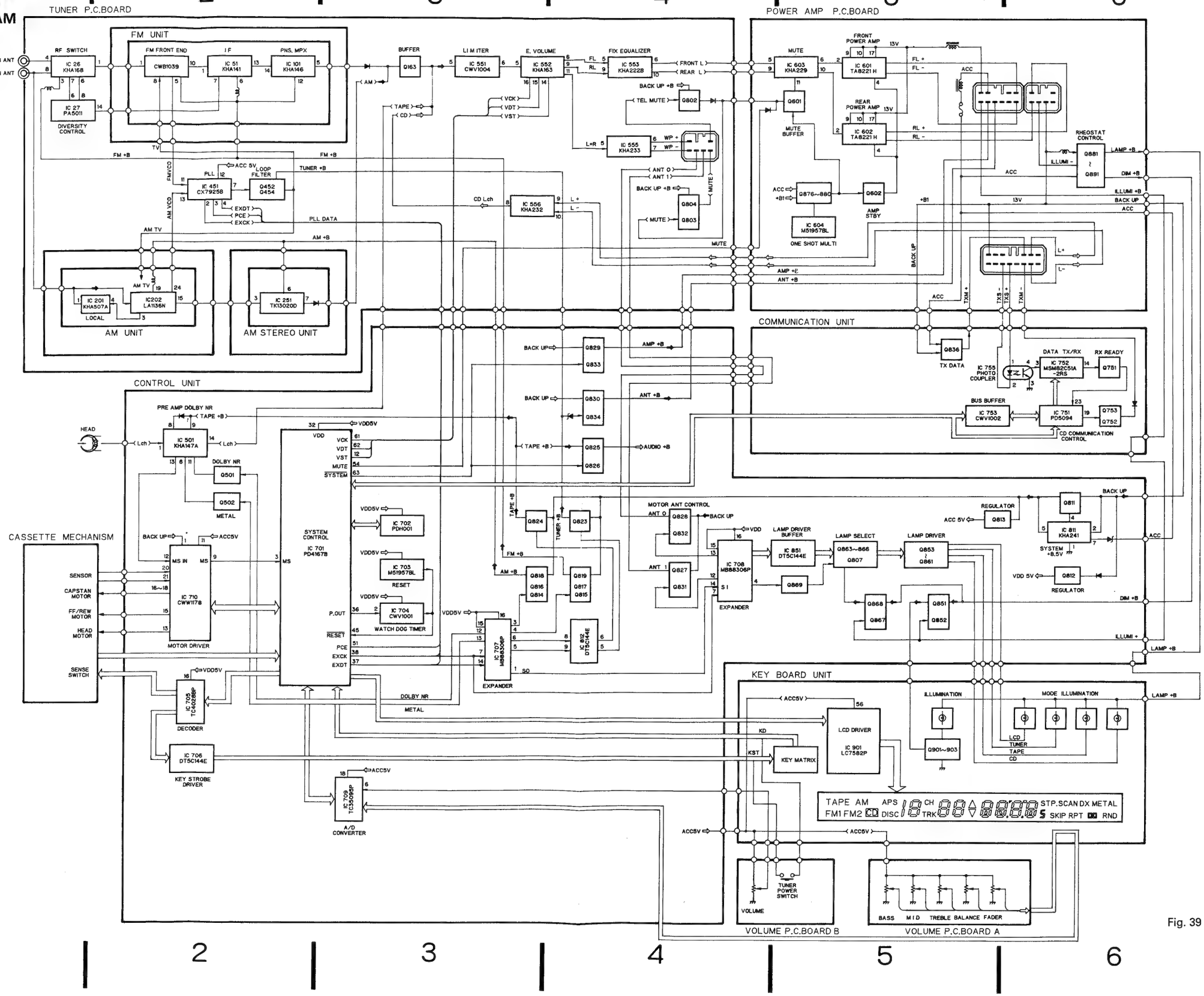

Fig. 39

6.6 DATA COMMUNICATION BLOCK DIAGRAM

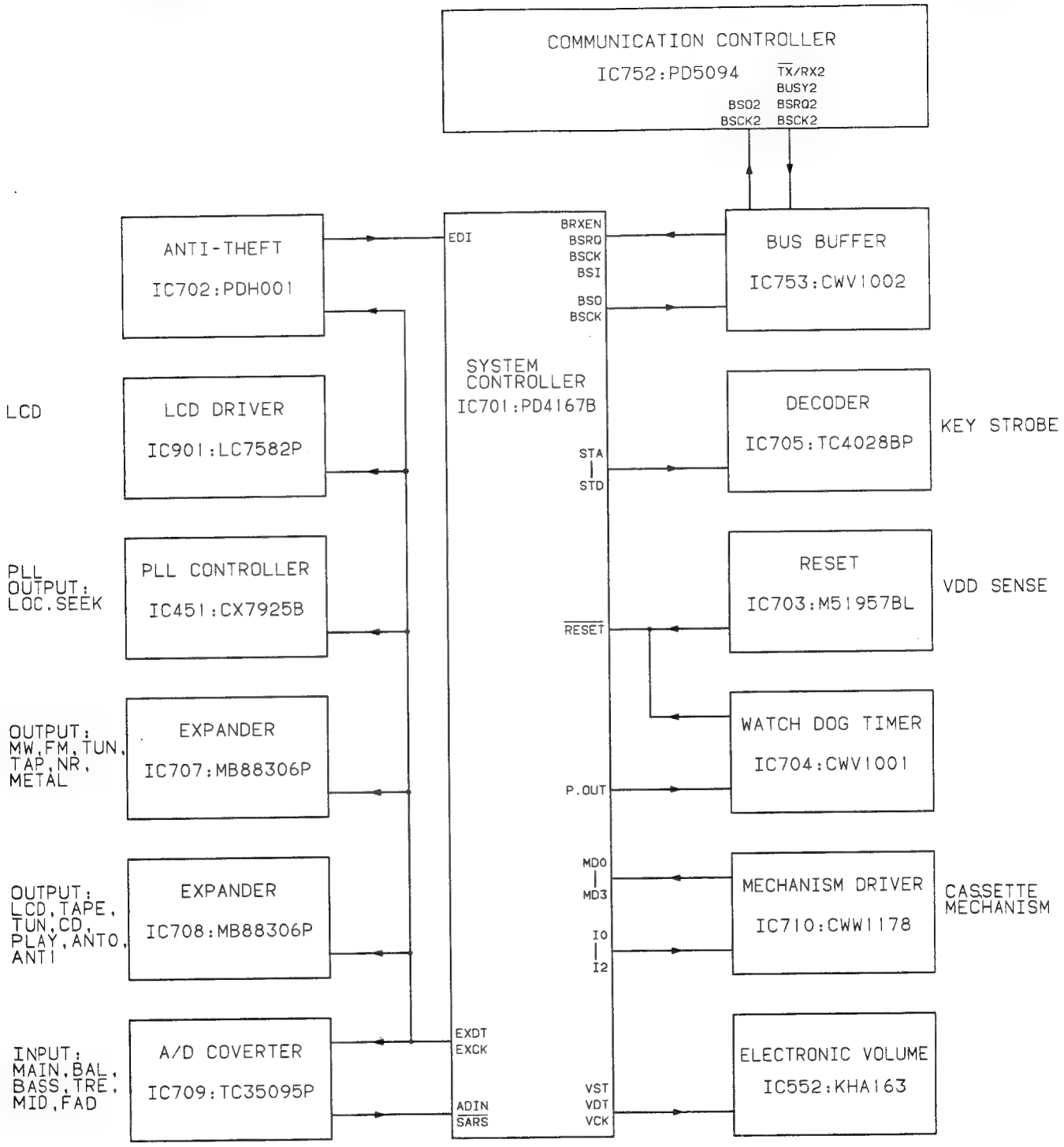

Fig. 40

7. EXTENSION CABLE GUIDE

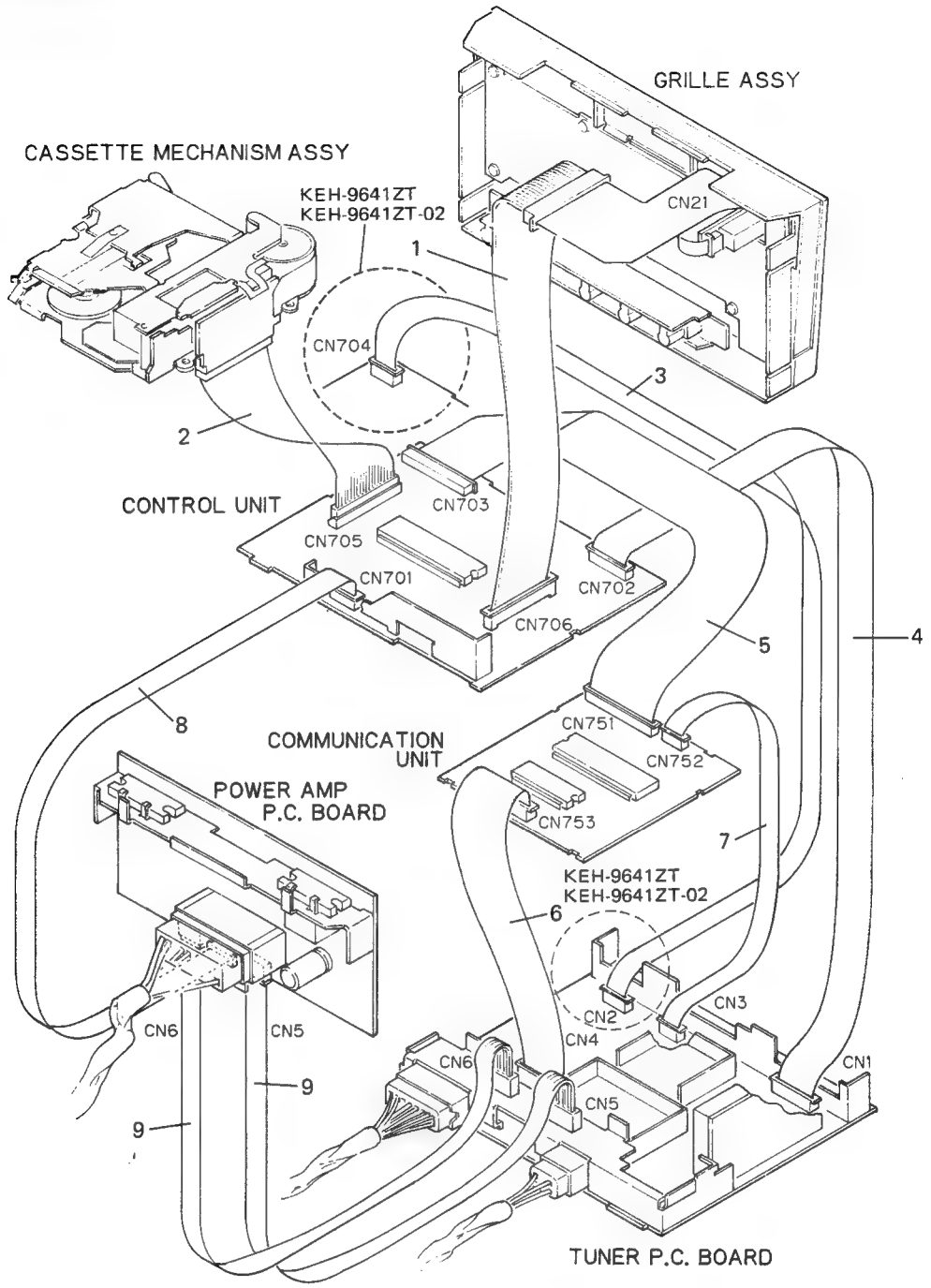

Fig. 41

No.	Part No.	Note	No.	Part No.	Note
1	GGF-126		6	GGF1017	KEH-M9741ZT, KEH-M9741ZT-02
2	GGF-070		7	GGF1016	KEH-M9741ZT, KEH-M9741ZT-02
3	GGF1018	KEH-9641ZT, KEH-9641ZT-02	8	GGF1015	
4	GGF1013		9	GGF-079	
5	GGF1014	KEH-M9741ZT, KEH-M9741ZT-02			

8. ADJUSTMENT

8.1 TEST MODE

Test mode is mainly used in adjustment of CD multi-player CDX-M9741ZT

- Switching to test mode
  While pressing the POWER, TUNE keys together, switch the back-up ON.
- Canceling test mode
  Switch the CD multi-player back-up OFF.
- Key functions during test mode
  The CD multi-player is selected by the CD key.

a) CD multi-player

Key	Function
SCAN	DD converter ON/OFF
FF	FWD kick
TRACK >	REV kick
TRACK <	Tracking close
DISC	Tracking open
RPT	Focus close
RANDOM	Disc change

- **Flow Chart**

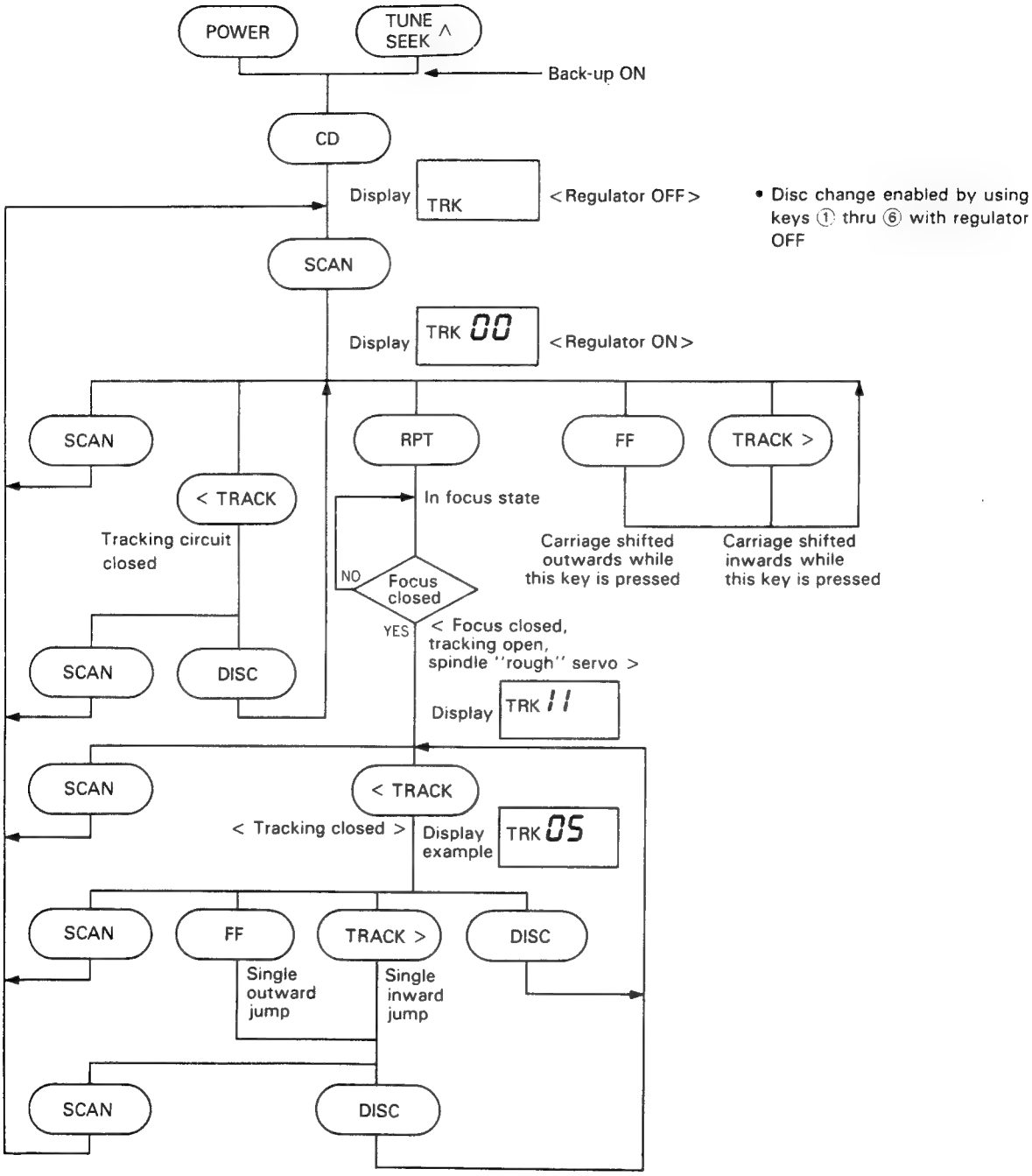
POWER
TUNE SEEK ^
Back-up ON
CD
Display TRK
<Regulator OFF>
• Disc change enabled by using keys ① thru ⑥ with regulator OFF
SCAN
Display TRK 00
<Regulator ON>
SCAN
RPT
FF
TRACK >
< TRACK
In focus state
Tracking circuit closed
NO
Focus closed
YES
Carriage shifted outwards while this key is pressed
Carriage shifted inwards while this key is pressed
< Focus closed, tracking open, spindle "rough" servo >
SCAN
DISC
Display TRK 11
SCAN
< TRACK
< Tracking closed >
Display example TRK 05
SCAN
FF
TRACK >
DISC
Single outward jump
Single inward jump
SCAN
DISC

8.2 AUDIO/TUNER ADJUSTMENT

NOTICE:
Select C1 so that total capacity of 80pF is attained from the direction of the receiver jack.
Z: Output impedance of SSG.

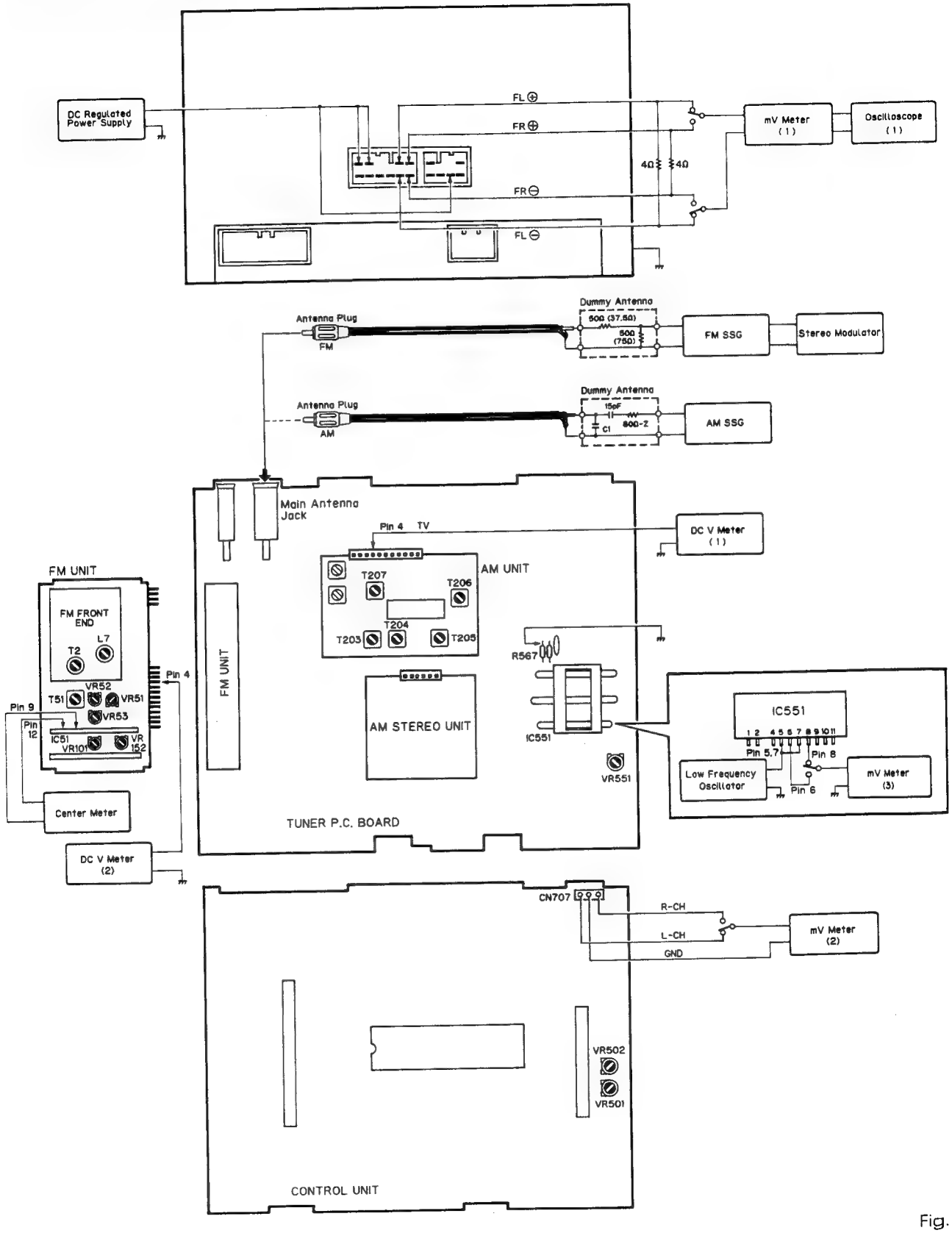

Fig. 42

DOLBY NR ADJUSTMENT

No.	Cassette Tape	Adjusting Point	Adjustment Method (Switch Position)
1	NCT-150 (400Hz, 200nwb/m)	VR501 (Lch) VR502 (Rch)	mV Meter (2) : 388mV (-6dBs) (DOLBY NR Switch: OFF)

LIMITER ADJUSTMENT

No.	Low Frequency Oscillator		Adjusting Point	Adjustment Method (Switch Position)
	Frequency (Hz)	Level (mV)		
1	2,000	500	——	R567 connect to ground. mV Meter (3) : A dB
2	50	500	VR551	mV Meter (3) : A ± 0.5 dB

AM ADJUSTMENT

	No.	AM SSG (400Hz, 30%)		Displayed Frequency (kHz)	Adjusting Point	Adjustment Method (Switch Position)
		Frequency (kHz)	Level (dBμV)			
Tuning Volt	1	530	25	530	T207	DC V Meter (1) : 1.0 ± 0.3V
	2	1,710	25	1,710	——	Verify that DC V Meter is less than 6.0 ± 0.5V.
	3	600	25	600	T203, 204, 205, 206	mV Meter (1) : Maximum
SEEK	1	1,000	35 ± 8	1,000		Verify that SEEK stops. SEEK stops level : BdB
	2	1,000	B + 22 ± 5	1,000		Verify that SEEK stops.

FM ADJUSTMENT

※1 Stereo MOD. : 1kHz, L+R=90% , Pilot=10%
※2 Disconnect antenna plug

	No.	FM SSG (400Hz, 100%)		Displayed Frequency (MHz)	Adjusting Point	Adjustment Method (Switch Position)
		Frequency (MHz)	Level (dBμV)			
IF	1	98.1	60	98.1	T51	Center Meter:0
Fro-nt End	1			107.9	L7	DC V Meter (1) :6.7±0.2V
	2			87.9	——	Verify that DC V Meter is more than 2.2±0.6V.
	3	98.1	15	98.1	T2	mV Meter (1) :Maximum
ARC	1	98.1	60	98.1	VR51	DC V Meter (2) :2.5±0.1V
MPX	1	98.1 ※1	60	98.1	VR101	mV Meter (1) :Separation Maximum
	2	98.1 ※1	35	98.1	VR152	mV Meter (1) :Separation 5dB
	3	98.1 ※1	60	98.1	——	mV Meter (1) :CdB
	4	98.1 ※1	-∞ ※2	98.1	VR53	mV Meter (1) :C-20dB
SEEK	1	98.1	22±6	98.1	VR52	Make SEEK stop. SEEK stops level:DdB
	1	98.1	D+28±10	98.1		Verify that SEEK stops.

• ICs and Transistors

2SB1243
2SC3665
2SD1226MF
2SD1859

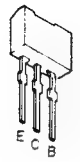

2SA1048
2SC1740S
2SC2458
2SC3113

2SK330

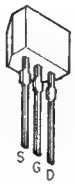

2SK435

2SB942

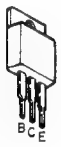

2SC3473

2SC2872S

2SA1162
2SC2712
2SC3295

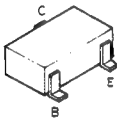

DTA144ES
DTA114ES
DTB114ES
DTC114ES
DTC144ES
DTC124ES
DTC144TS

DTB113ZV
DTB133HV

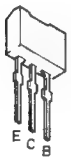

DTA144EK
DTC123EK
DTC144EK
DTC143EK
DTC124EK

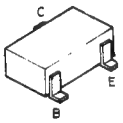

DTC144ES
DTC114ES
DTC124ES

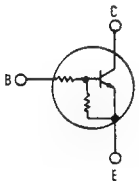

DTA144ES
DTA114ES
DTB114ES
DTB113ZV
DTB133HV

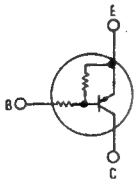

DTC144TS

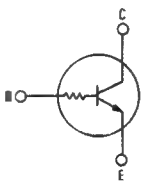

DTA144EK

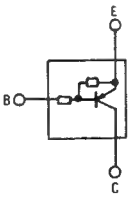

DTC123EK
DTC144EK
DTC143EK
DTC124EK

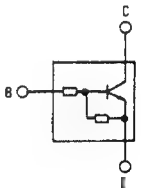

PA5011

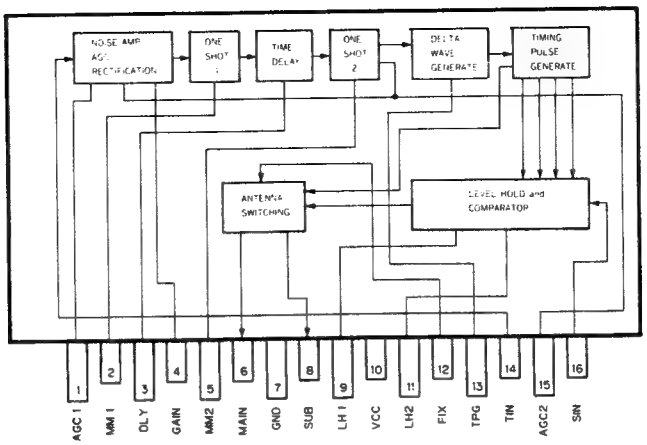

● Pin Functions (PA5011)

Pin No.	Pin Name	I/O	Functions and Operation
1	AGC1		Connected to gain control, noise amplifier AGC1 CR.
2	MM1		Connected to MMV1 output pulse width setting capacitor.
3	DLY		Connected to time delay setting capacitor.
4	GAIN		Connected to noise amplifier gain setting CR.
5	MM2		Connected to MMV2 output pulse width setting capacitor.
6	MAIN	O	"L" when the main antenna is selected.
7	GND		
8	SUB	O	"L" when the sub antenna is selected. Output phase is the opposite of that of the main antenna. Open corrector output.
9	LH1		Connected to level hold 1 capacitor.
10	VCC		
11	LH2		Connected to level hold 2 capacitor.
12	FIX	I	Auto mode when open. Fixed at main antenna when connected to GND. Fixed at sub antenna when connected to VCC.
13	TPG		Connected to timing pulse generation capacitor.
14	TIN	I	Noise amplifier input terminal. The tuner signal meter output signal passes through a capacitor and is input.
15	AGC2		Connected to noise amplifier AGC2 CR.
16	SIN	I	Level hold circuit input terminal. Tuner signal meter output signal is input.

KHA141A

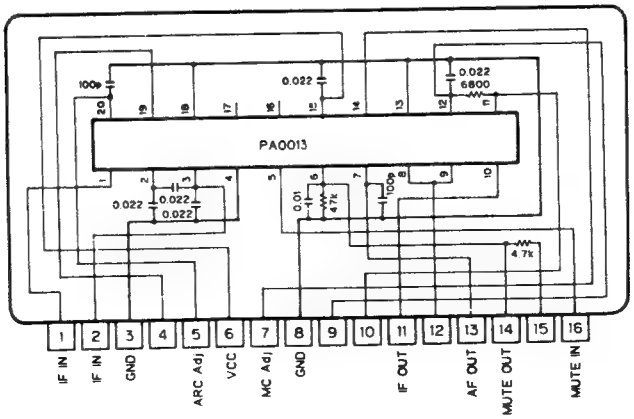

KHA146

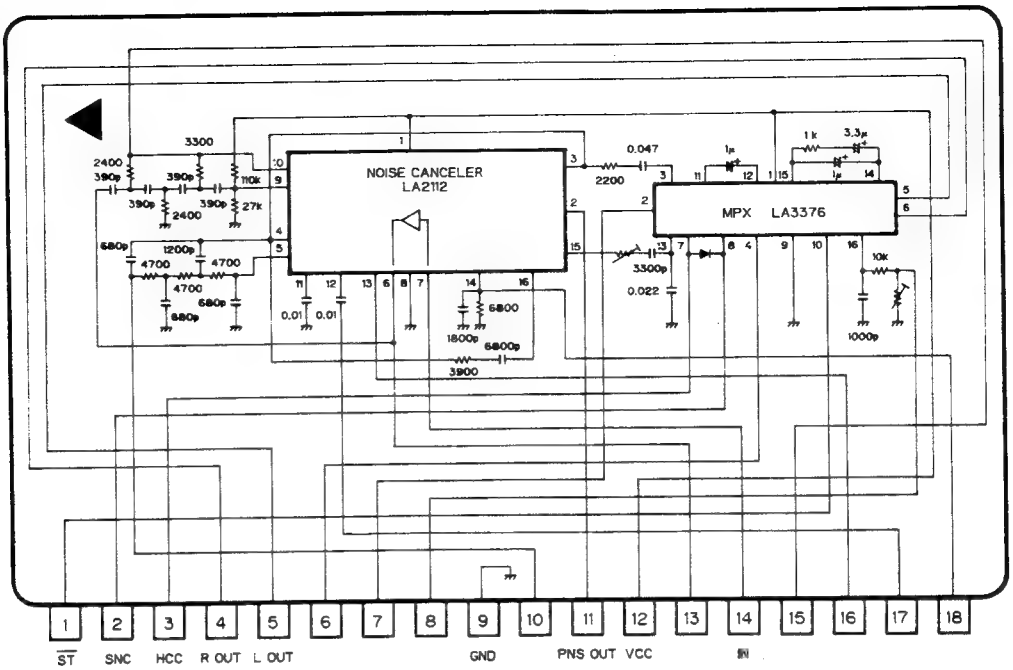

KHA507

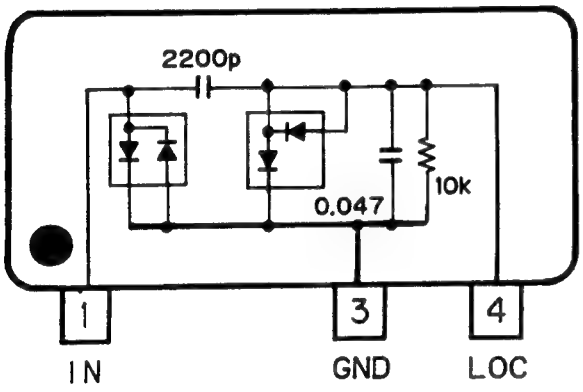

KHA168

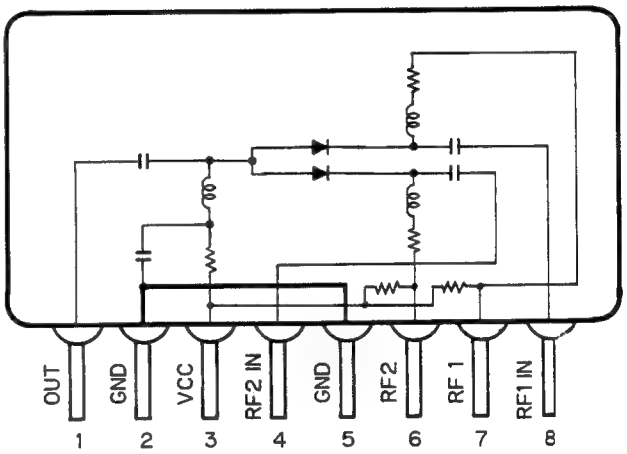

LA1136N

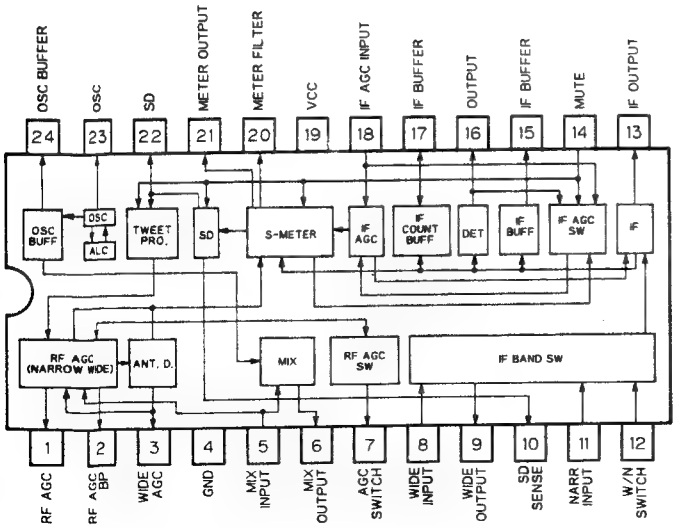

TK13020D

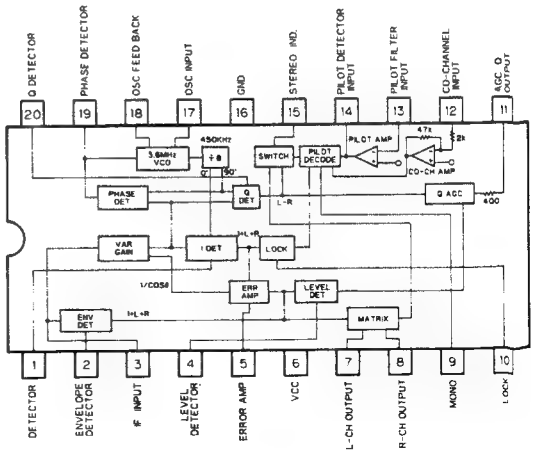

CX-7925B

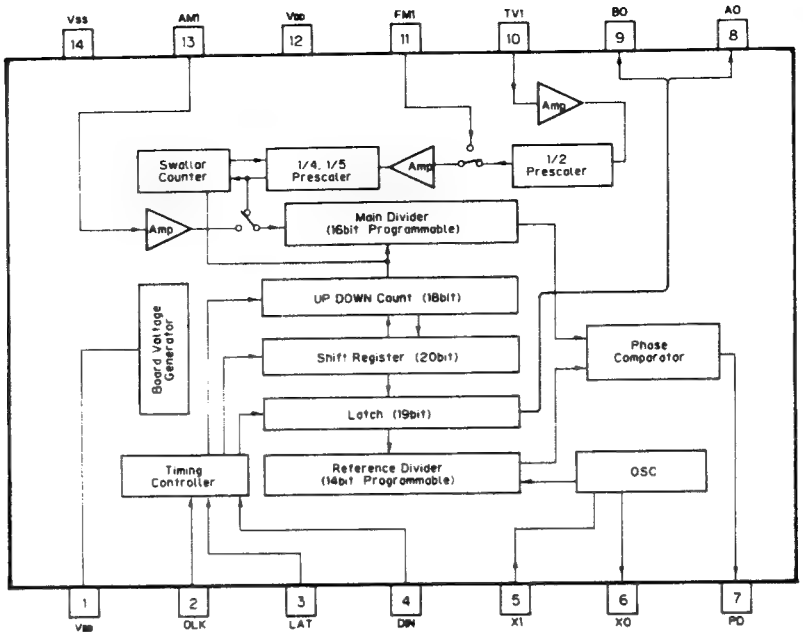

KHA147

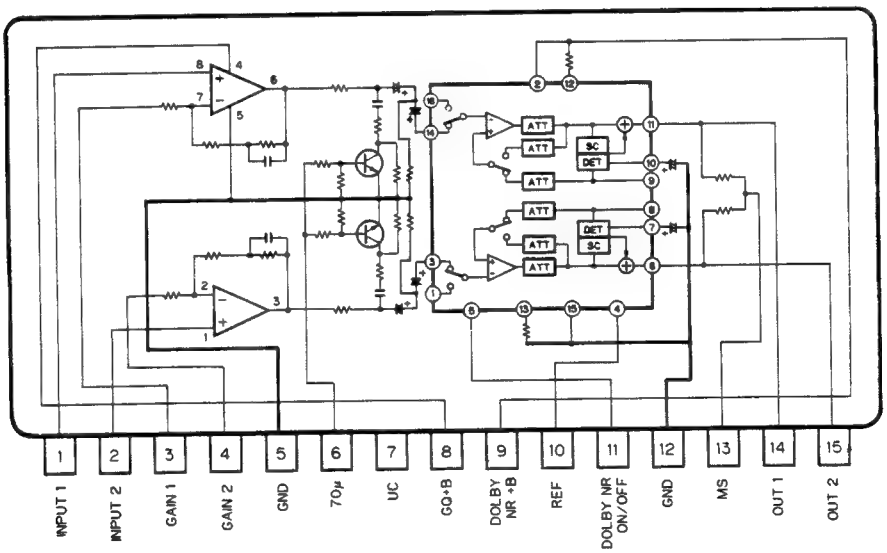

CWV1004

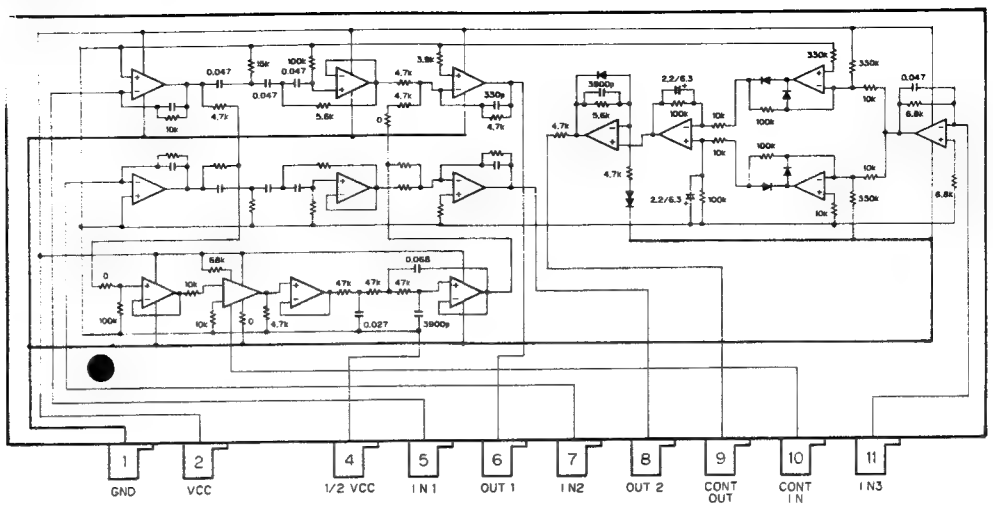

KHA163

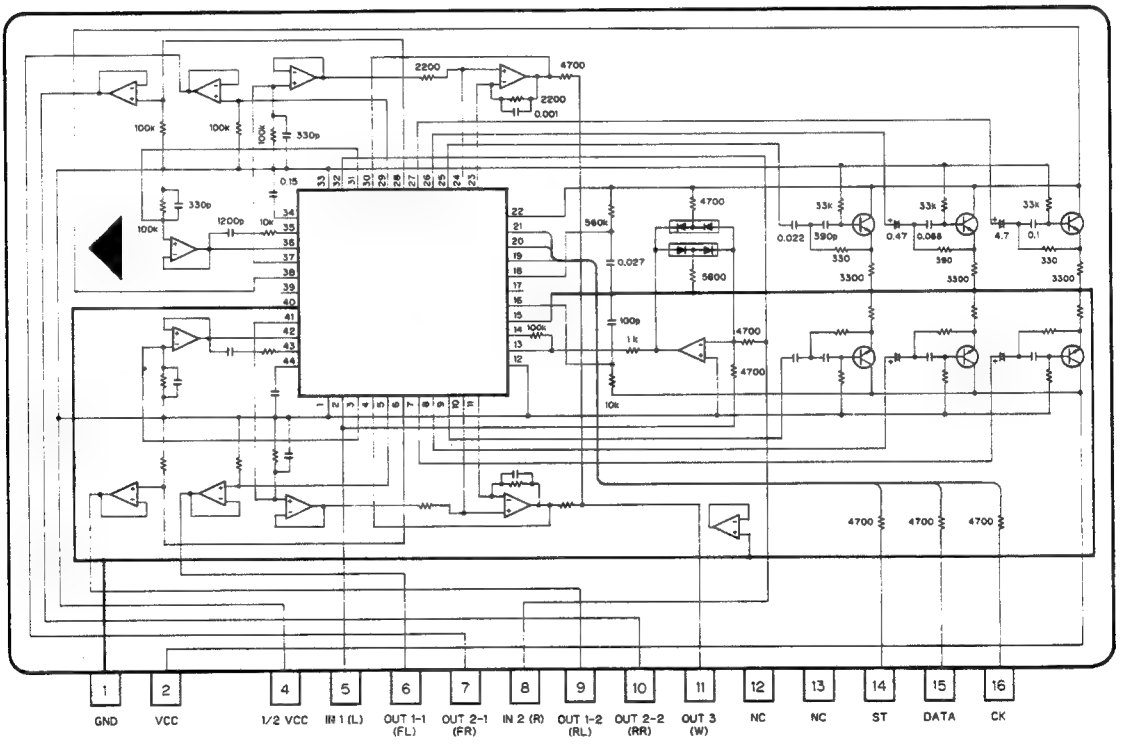

KHA229

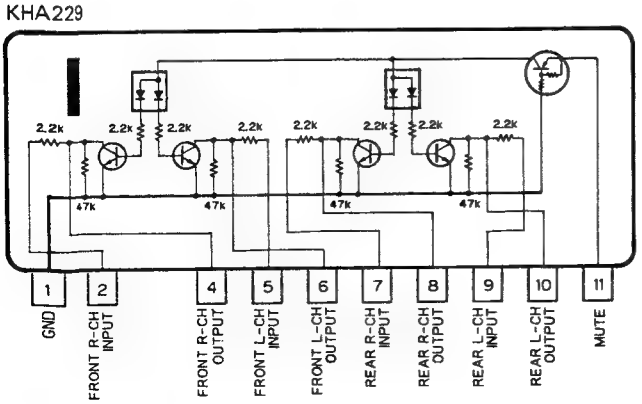

KHA233

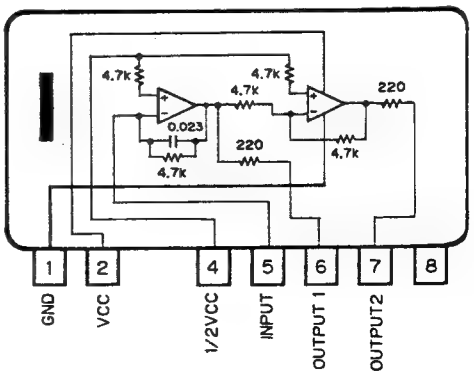

KHA222B, KHA249B

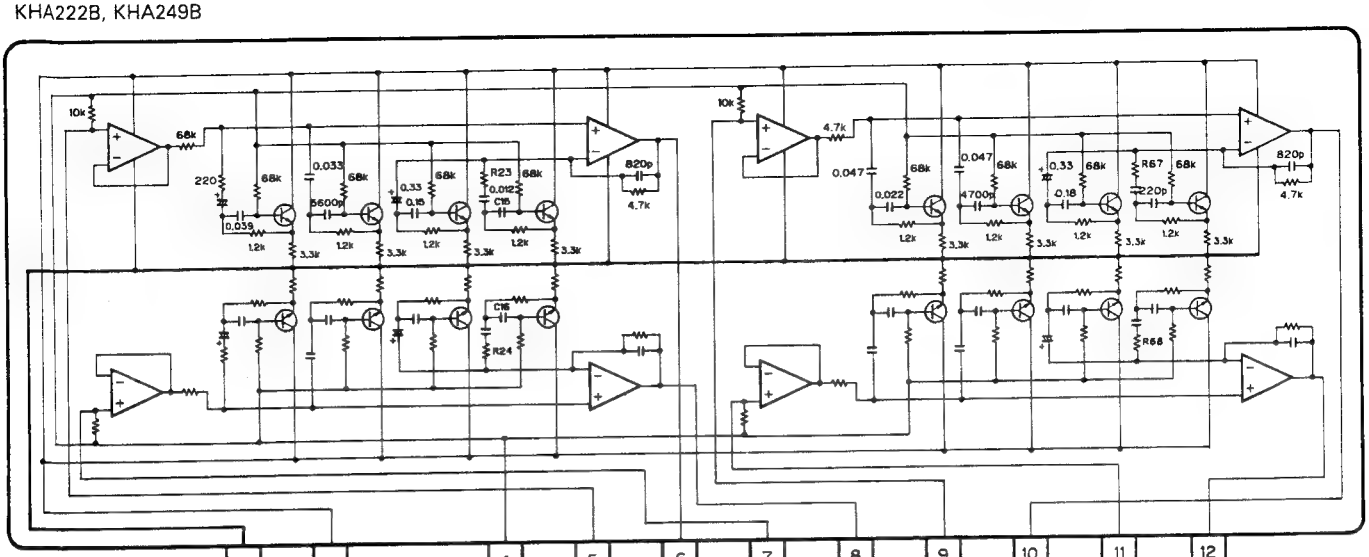

	KHA222B	KHA249B
R23, 24	2.2k	1.5k
R67, 68	1.5k	0
C15, 16	820p	680p

KHA232A

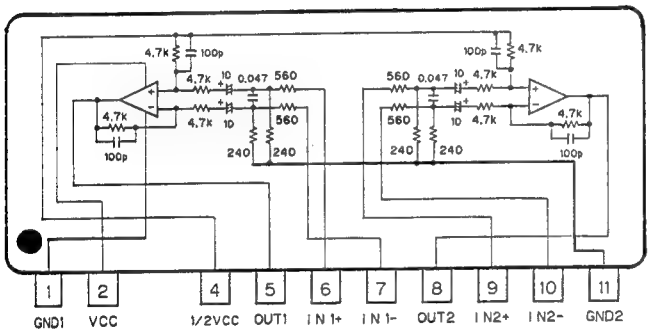

TA8221H

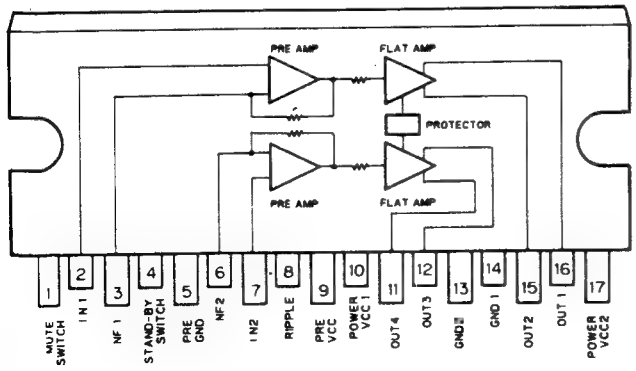

*PD4167B

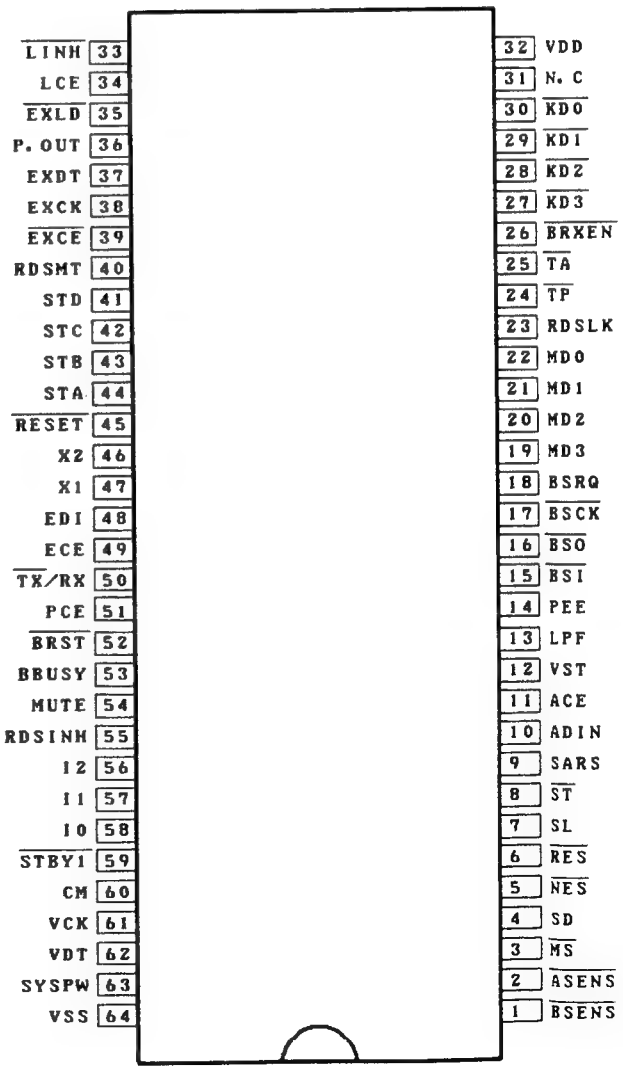

*IC's marked by * are MOS type.*
Be careful in handling them because they are very liable to be damaged by electrostatic induction.

• Pin Function (PD4167B)

Pin No.	Pin Name	I/O	Output Format	Function and Operation
1	$\overline{\text{BSENS}}$	Input		Back up power sense input pin
2	$\overline{\text{ASENS}}$	Input		ACC power sense input pin
3	$\overline{\text{MS}}$	Input		Tape MS signal input pin
4	SD	Input		SD input pin
5	$\overline{\text{NES}}$	Input		Reel pulse input pin for forward side of the tape
6	$\overline{\text{RES}}$	Input		Reel pulse input pin for reverse side of the tape
7	SL	Input		Station level analog voltage input
8	$\overline{\text{ST}}$	Input		Stereo input pin
9	SARS	Input		Status input pin for A/D converter(IC709)
10	ADIN	Input		Data input pin for A/D converter(IC709)
11	ACE	Output	C	Chip enable output pin for A/D converter (IC709)
12	VST	Output	C	Strobe pulse output pin for electronic volume (IC552)
13	LPF	Output	C	Not used
14	PEE	Output	C	Beep tone output pin f=4kHz 100mS
15	$\overline{\text{BST}}$	Input		Bus communication serial data input pin
16	$\overline{\text{BSO}}$	Output	C	Bus communication serial data output pin
17	$\overline{\text{BSCK}}$	Input/ Output	C	Bus communication serial clock input/output pin f=65kHz
18	BSRQ	Input		Bus communication survice request input pin
19 | 22	MD3 | MD0	Input		Mechanism switch sense input pins
23	RDSLK	Input		Not used
24	$\overline{\text{TP}}$	Input		Not used
25	$\overline{\text{TA}}$	Input		Not used
26	$\overline{\text{BRXEN}}$	Input		Bus communication reception enable input pin
27 | 30	$\overline{\text{KD3}}$ | $\overline{\text{KD0}}$	Input		Key data input pins
31	N.C			

Pin No.	Pin Name	I/O	Output Format	Function and Operation
32	VDD			Device power supply terminal
33	$\overline{\text{LINH}}$	Output	C	Inhibit output pin for LCD driver(IC901)
34	LCE	Output	C	Chip enable output pin for LCD driver(IC901)
35	$\overline{\text{EXLD}}$	Output	C	Data load output pin for expander(IC707, 708)
36	P.OUT	Output	C	Pulse output pin for watch dog timer(IC704)
37	EXDT	Output	C	Data output pin for external IC
38	EXCK	Output	C	Clock output pin for external IC
39	$\overline{\text{EXCE}}$	Output	C	Chip enable pin for expander(IC707, 708)
40	RDSMT	Output	C	Not used
41 | 44	STD | STA	Output	C	Mechanism switch, strobe output pins
45	$\overline{\text{RESET}}$	Input		Reset input pin
46 47	X2 X1			Crystal oscillator connection pins
48	EDI	Input		Serial data output pin for EEPROM(IC702)
49	ECE	Output	C	Chip enable pin for EEPROM(IC702)
50	$\overline{\text{TX}}$/RX	Output	C	Bus communication TX(Transmission)/RX(Reception) control output pin
51	PCE	Output	C	PLL IC(IC451) chip enable pin
52	$\overline{\text{BRST}}$	Output	C	Bus communication reset output pin
53	BBUSY	Output	C	Bus communication busy output pin
54	MUTE	Output	C	System mute output pin
55	RDSINH	Output	C	Not used
56 57 58	I2 I1 I0	Output	C	Data output pins for mechanism driver(IC710)
59	$\overline{\text{STBYT}}$	Output	C	Standby output pin for mechanism driver(IC710)
60	CM	Output	C	Capstan motor ON/OFF control output pin
61	VCK	Output	C	Clock output pin for electronic volume(IC522)
62	VDT	Output	C	Data output pin for electronic volume(IC522)
63	SYSPW	Output	C	Power amplifier power ON/OFF control output pin

Pin No.	Pin Name	I/O	Output Format	Function and Operation
64	VSS			GND terminal

Output format	Meaning
N	N channel open drain
C	C-MOS

PDH001

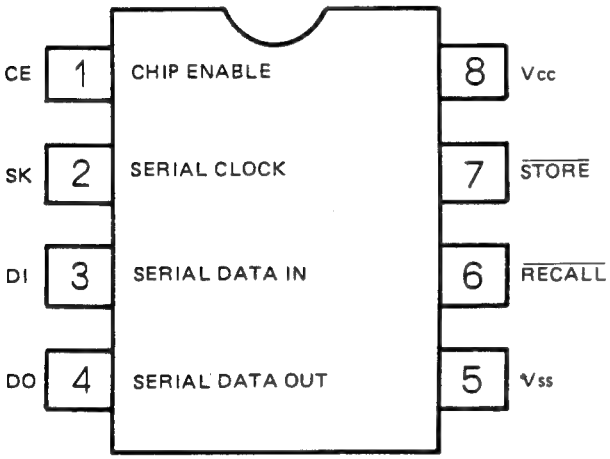

M51957BL

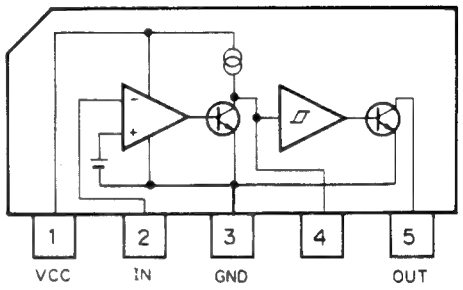

DT5C144E

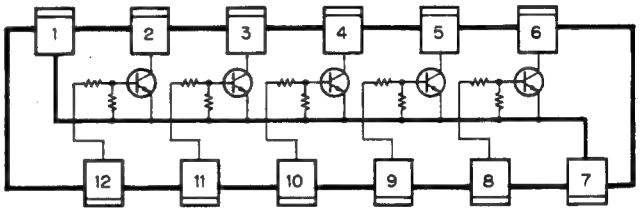

CWV1001

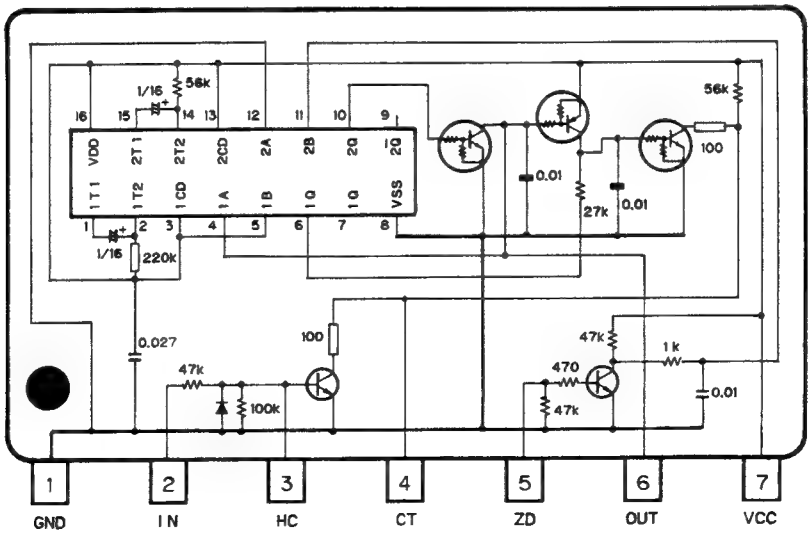

TC4028BP

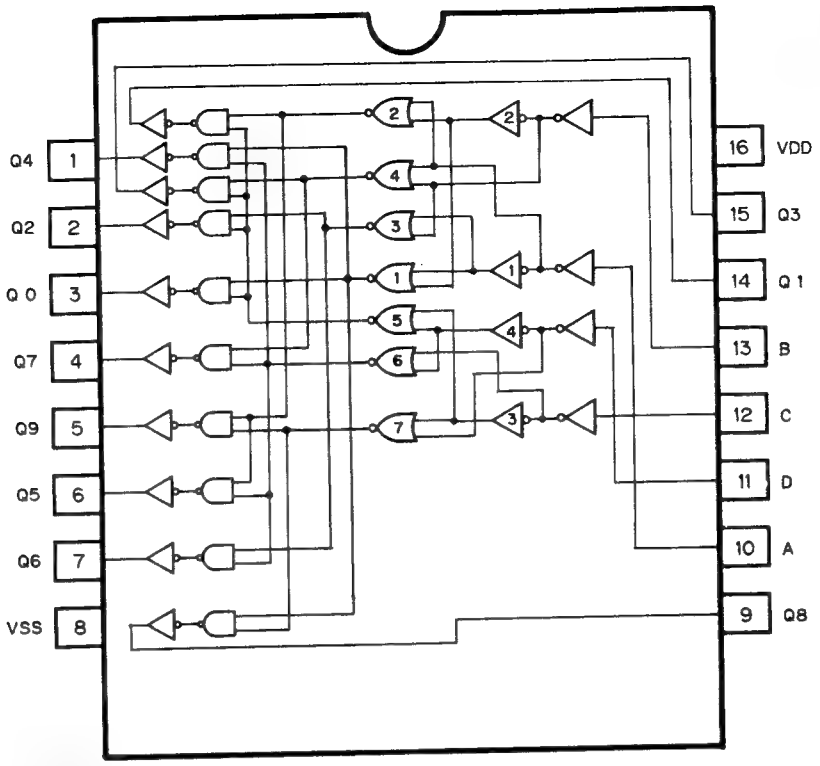

• Pin Function (TC4028BP)

Pin No.	Pin Name	I/O	Output Format	Function and Operation
1	KST1	Output	C	Key matrix strobe output pins
2	KST3			
3	KST0			
4	KST2			
5	KST4			
6	KST5			
7	KST6			
8	VSS			GND terminal
9	MST0	Output	C	Mechanism switch, strobe output pins
14	MST1			
15	MST2			
10	A	Input		Data input pins
11	D			
12	C			
13	B			
16	VDD			Device power supply terminal

IC707 : MB88306P

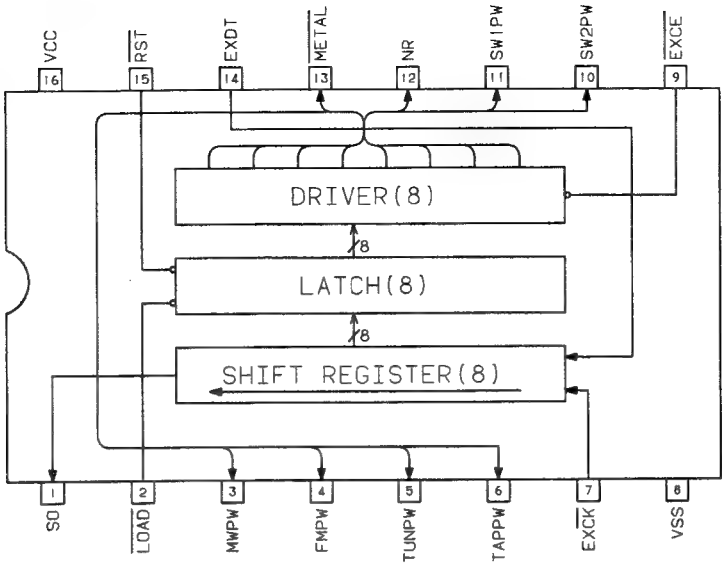

• Pin Function (IC707 : MB88306P)

Pin No.	Pin Name	I/O	Output Format	Function and Operation
1	SO	Output	C	Serial data output pin
2	$\overline{\text{LOAD}}$	Input		Data load input pin
3	MWPW	Output	C	MW+B ON/OFF select output pin
4	FMPW	Output	C	FM+B ON/OFF select output pin
5	TUNPW	Output	C	Tuner+B ON/OFF select output pin
6	TAPPW	Output	C	Tape+B ON/OFF select output pin
7	EXCK	Input		Clock input pin
8	VSS			GND terminal
9	$\overline{\text{EXCE}}$	Input		Chip enable input pin
10	SW2PW	Output	C	SW2+B ON/OFF select output pin
11	SW1PW	Output	C	SW1+B ON/OFF select output pin
12	NR	Output	C	Dolby NR ON/OFF select output pin
13	$\overline{\text{METAL}}$	Output	C	Tape METAL ON/OFF select output pin
14	EXDT	Input	C	Serial data output pin
15	$\overline{\text{RST}}$	Input		Reset input pin
16	VDD			Device power supply terminal

IC708 : MB88306P

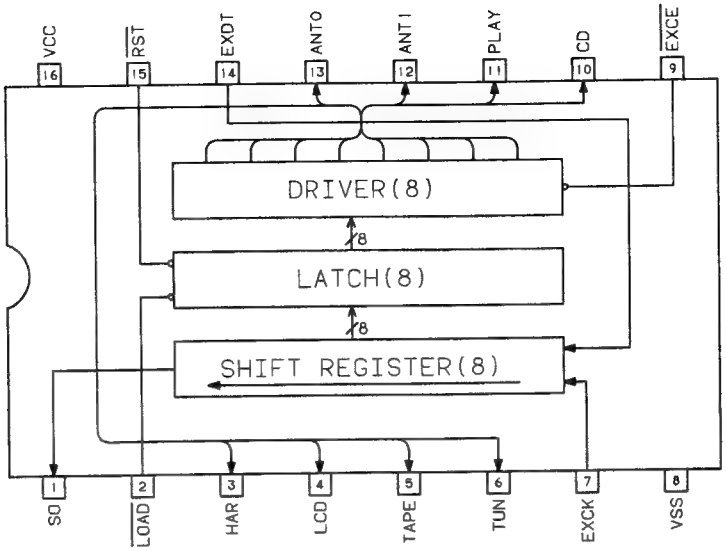

• Pin Function (IC708 : MB88306P)

Pin No.	Pin Name	I/O	Output Format	Function and Operation
1	SO	Output	C	Serial data output pin
2	$\overline{\text{LOAD}}$	Input		Data load input pin
3	HAR	Output	C	Not used
4	LCD	Output	C	Lamp of LCD ON/OFF control output pin
5	TAPE	Output	C	Lamp of TAPE ON/OFF control output pin
6	TUN	Output	C	Lamp of TUNER ON/OFF control output pin
7	EXCK	Input		Clock input pin
8	VSS			GND terminal
9	$\overline{\text{EXCE}}$	Input		Chip enable input pin
10	CD	Output	C	Lamp of CD ON/OFF control output pin
11	$\overline{\text{PLAY}}$	Output	C	Tape MS filter select output pin
12	ANT1	Output	C	ANT1 control output pin
13	ANT0	Output	C	ANT0 control output pin
14	EXDT	Input	C	Serial data output pin
15	$\overline{\text{RST}}$	Input		Reset input pin
16	VDD			Device power supply terminal

TC35095P

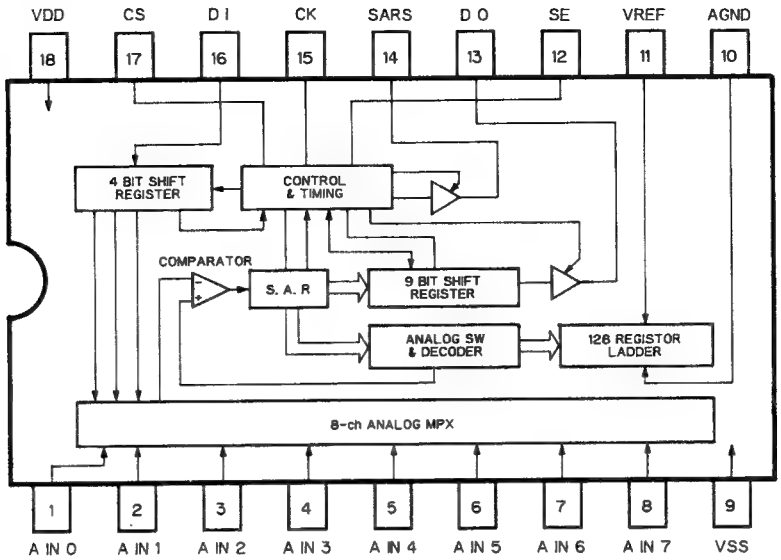

• Pin Function (TC35095P)

Pin No.	Pin Name	I/O	Output Format	Function and Operation
1	N. C			Not used
2	N. C			Not used
3	BASS	Input		BASS level input terminal
4	TRE	Input		TREBLE level Input terminal
5	FAD	Input		FADER level input terminal
6	MAIN	Input		VOLUME level input terminal
7	BAL	Input		BALANCE level input terminal
8	MID	Input		MIDDLE level input terminal
9	VSS			GND terminal
10	AG			Analog GND terminal
11	VREF	Input		Reference voltage input pin
12	SE	Input		Not used
13	DO	Output	C	Serial data output pin
14	SARS	Output	C	Status output pin
15	EXCK	Input		Serial clock input pin
16	EXDT	Input		Data input pin
17	ACE	Input		Chip enable input pin
18	VDD			Device power supply terminal

CWW1178

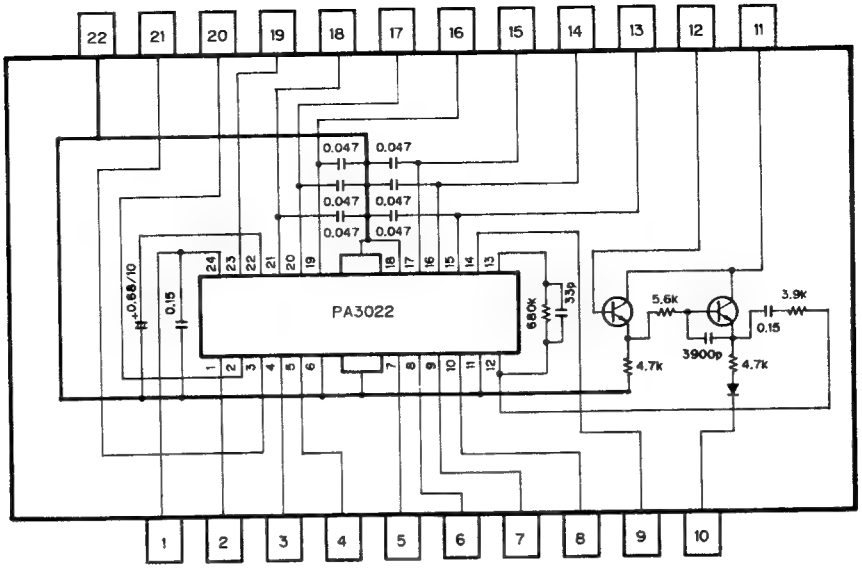

PA3022

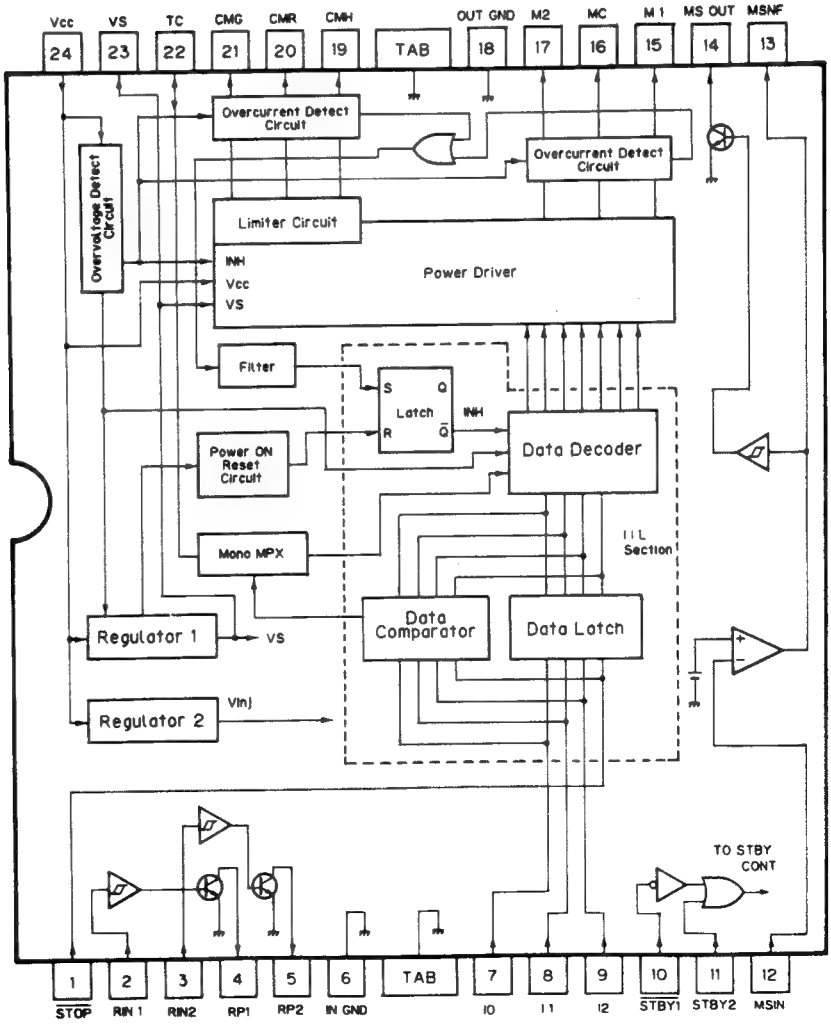

*PD5094

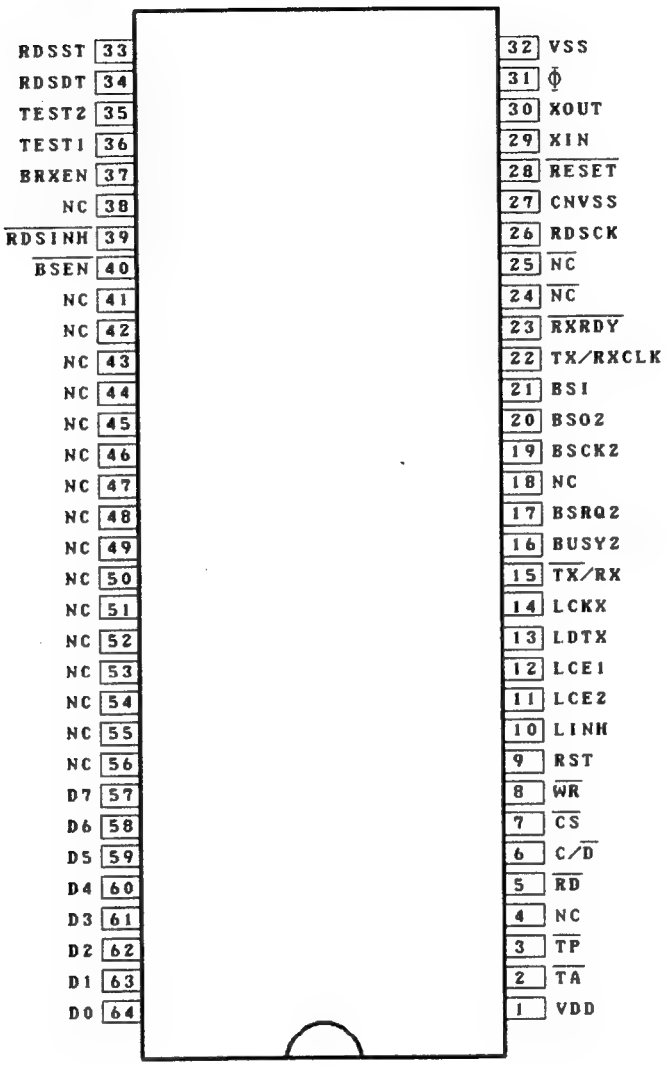
RDSST 33
RDSDT 34
TEST2 35
TEST1 36
BRXEN 37
NC 38
RDSINH 39
BSEN 40
NC 41
NC 42
NC 43
NC 44
NC 45
NC 46
NC 47
NC 48
NC 49
NC 50
NC 51
NC 52
NC 53
NC 54
NC 55
NC 56
D7 57
D6 58
D5 59
D4 60
D3 61
D2 62
D1 63
D0 64
32 VSS
31 Φ
30 XOUT
29 XIN
28 RESET
27 CNVSS
26 RDSCK
25 NC
24 NC
23 RXRDY
22 TX/RXCLK
21 BSI
20 BSO2
19 BSCK2
18 NC
17 BSRQ2
16 BUSY2
15 TX/RX
14 LCKX
13 LDTX
12 LCE1
11 LCE2
10 LINH
9 RST
8 WR
7 CS
6 C/D
5 RD
4 NC
3 TP
2 TA
1 VDD

• Pin Function (PD5094)

Pin No.	Pin Name	I/O	Output Format	Function and Operation
1	VDD			Device power supply terminal
2	$\overline{TA}$	Output	C	Not used
3	$\overline{TP}$	Output	C	Not used
4	NC			
5	$\overline{RD}$	Output	C	Read signal output pin for IC752
6	C/$\overline{D}$	Output	C	Control/Data switching signal output pin for IC752
7	$\overline{CS}$	Output	C	Chip select signal output pin for IC752
8	$\overline{WR}$	Output	C	Write signal output pin for IC752
9	RST	Output	C	Reset signal output pin for IC752
10	LINH	Output	C	Not used
11	LCE2	Output	C	Not used
12	LCE1	Output	C	Not used
13	LDTX	Output	C	Not used
14	LCKX	Output	C	Not used
15	$\overline{TX}$/RX2	Output	C	Bus communication TX(Transmission)/RX(Reception) control output pin
16	BUSY2	Output	C	Bus communication busy output pin
17	BSRQ2	Output	C	Bus communication service request output pin
18	NC			
19	BSCK2	Input/ Output	C	Bus communication serial clock input/output pin f=19.2kHz
20	BSO2	Output	C	Bus communication serial data output pin
21	BSI	Input		Bus communication serial data input pin
22	TX/RX CLK	Output	C	Communication sampling clock output pin for IC753 f=76.8kHz
23	$\overline{RXRDY}$	Input		Reception request input pin
24	NC			
25	NC			
26	RDSCK	Input		Not used
27	CNVSS	Input		GND

Pin No.	Pin Name	I/O	Output Format	Function and Operation
28	$\overline{\text{RESET}}$	Input		Reset input pin
29 30	XIN XOUT	Input Output	C	Crystal oscillator connection pins
31	Φ	Output	C	Clock output pin for IC752 f=1, 228, 800Hz
32	VSS			GND
33	RDSST	Input		Not used
34	RDSDT	Input		Not used
35 36	TEST2 TEST1	Input		Not used
37	BRXEN	Input		Bus communication reception enable input pin
38	NC			
39	$\overline{\text{RDSTNH}}$	Input		Not used
40	$\overline{\text{BSEN}}$	Input		Back up power sense input pin
41 | 56	NC			
57 | 64	D7 | D0	Input/ Output		Data input/output pins for IC752

MSM82C51A-2RS-H

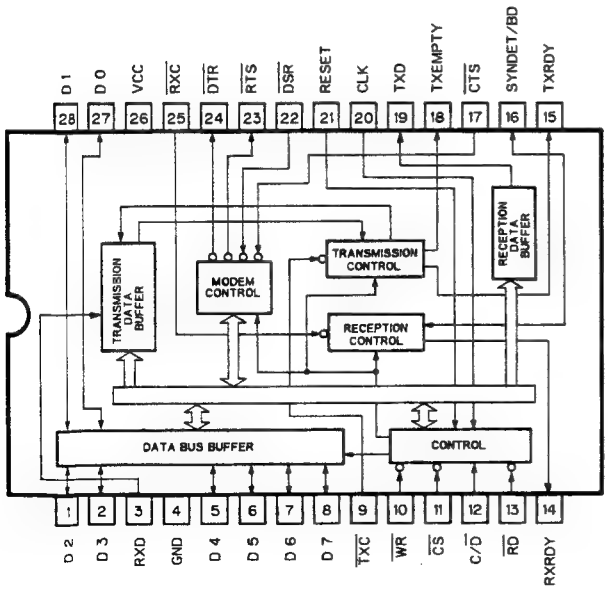

KHA241

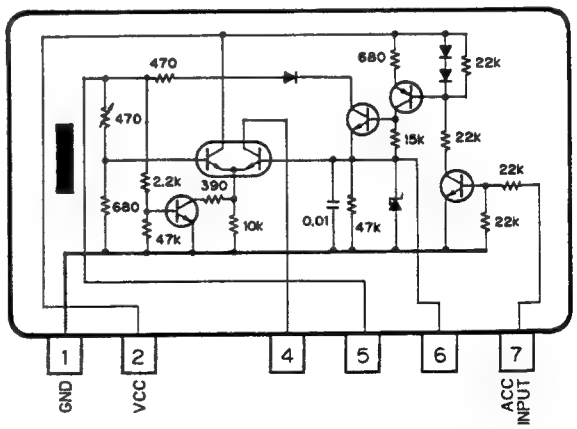

CWV1002

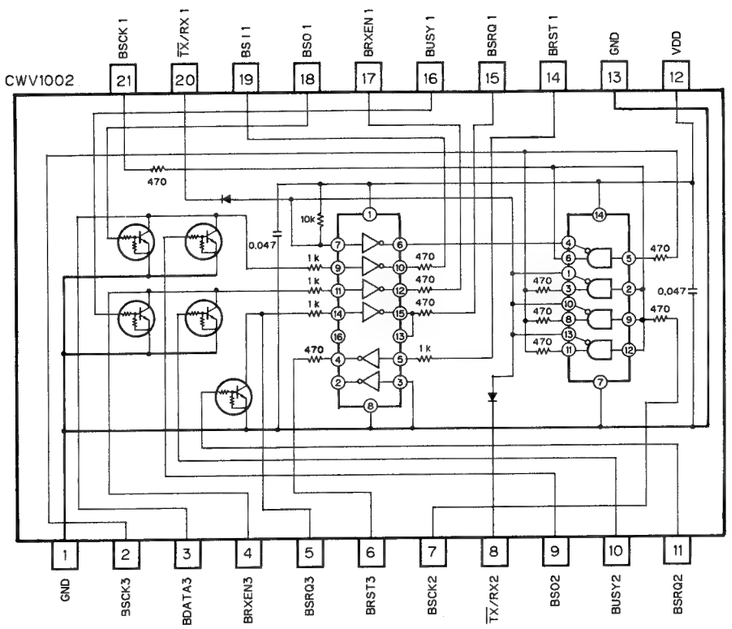

LC7582P

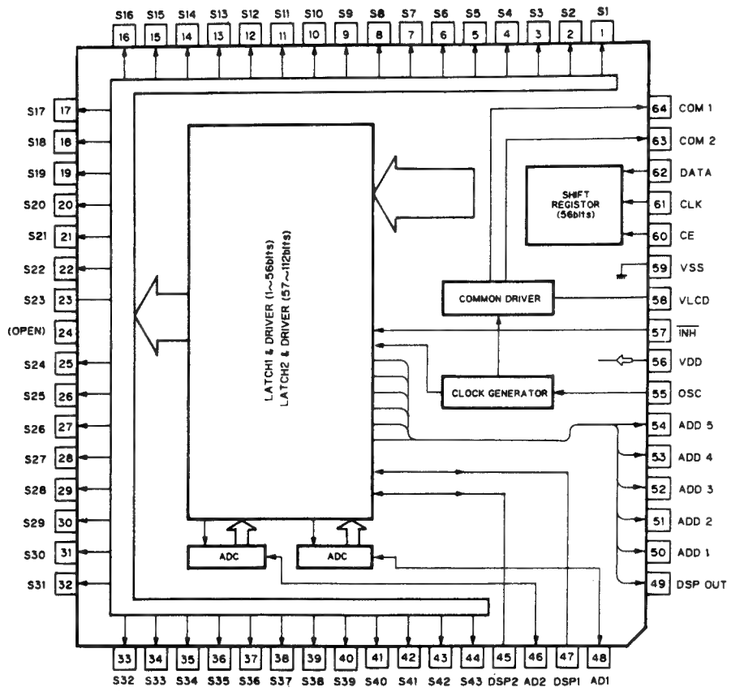

• LCD (CWA1044)

SEGMENT

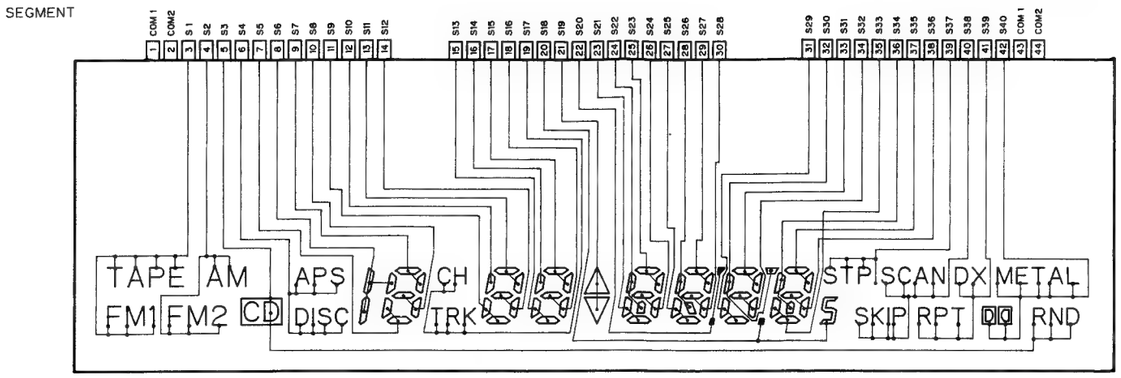

COMMON

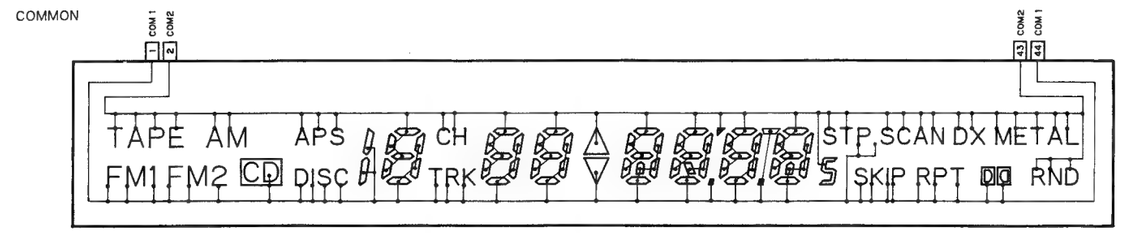

Fig. 43

• FM FRONT END (CWB1039)

NOTE:
Decimal points for resistor and capacitor fixed values are expressed as:
2.2→2R2
0.022→R022

FM FRONT END (CWB1039)

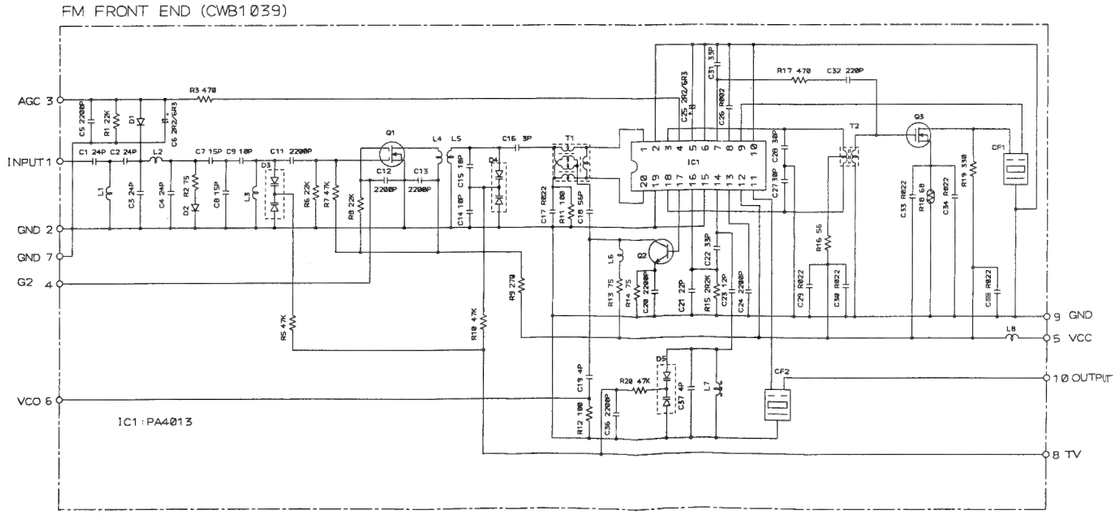

Fig. 44

9. OVER ALL SCHEMATIC DIAGRAM

9.1 KEH-M9741ZT, KEH-M9741ZT-02

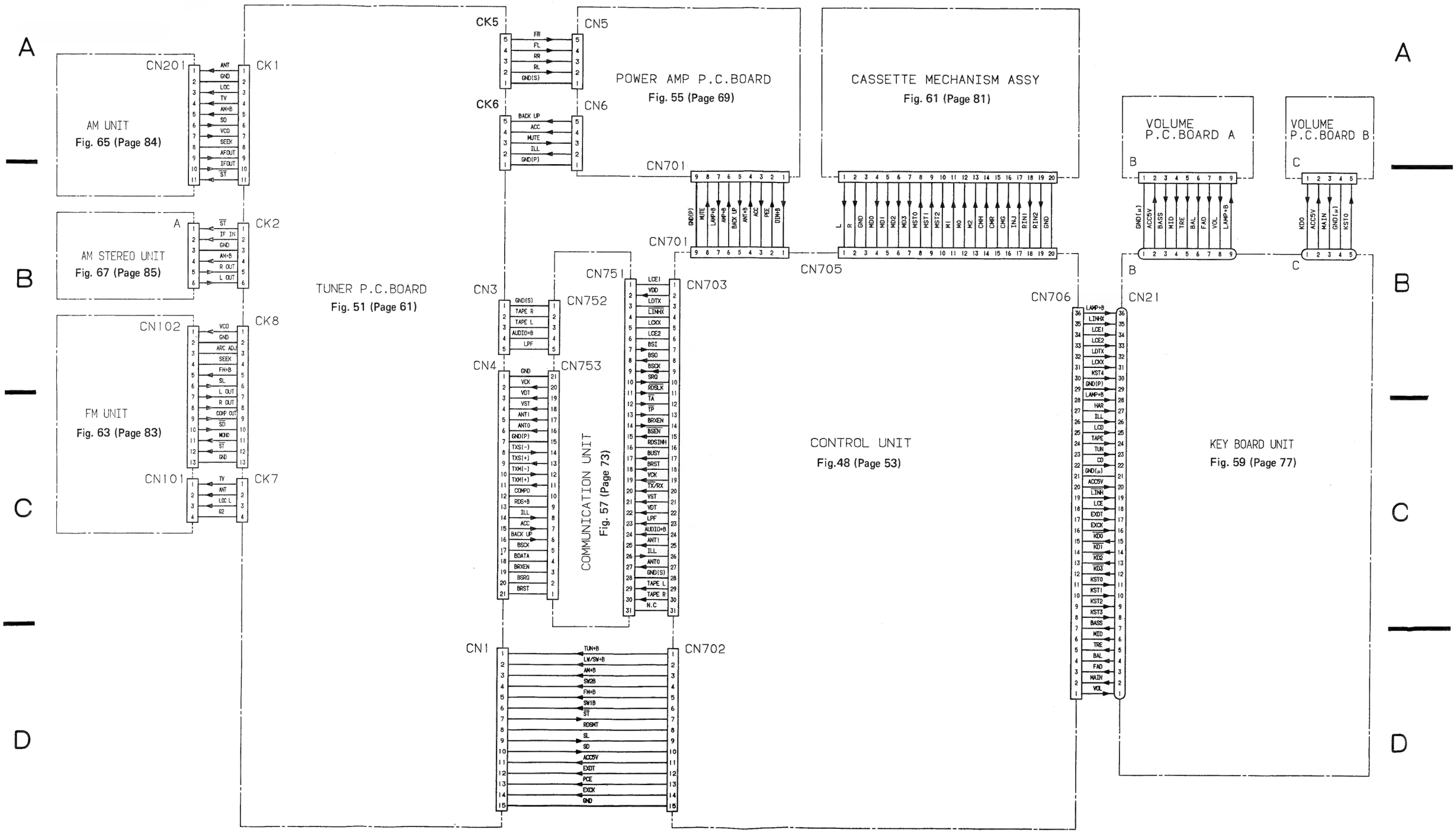

Fig. 45

9.2 KEH-9641ZT, KEH-9641ZT-02

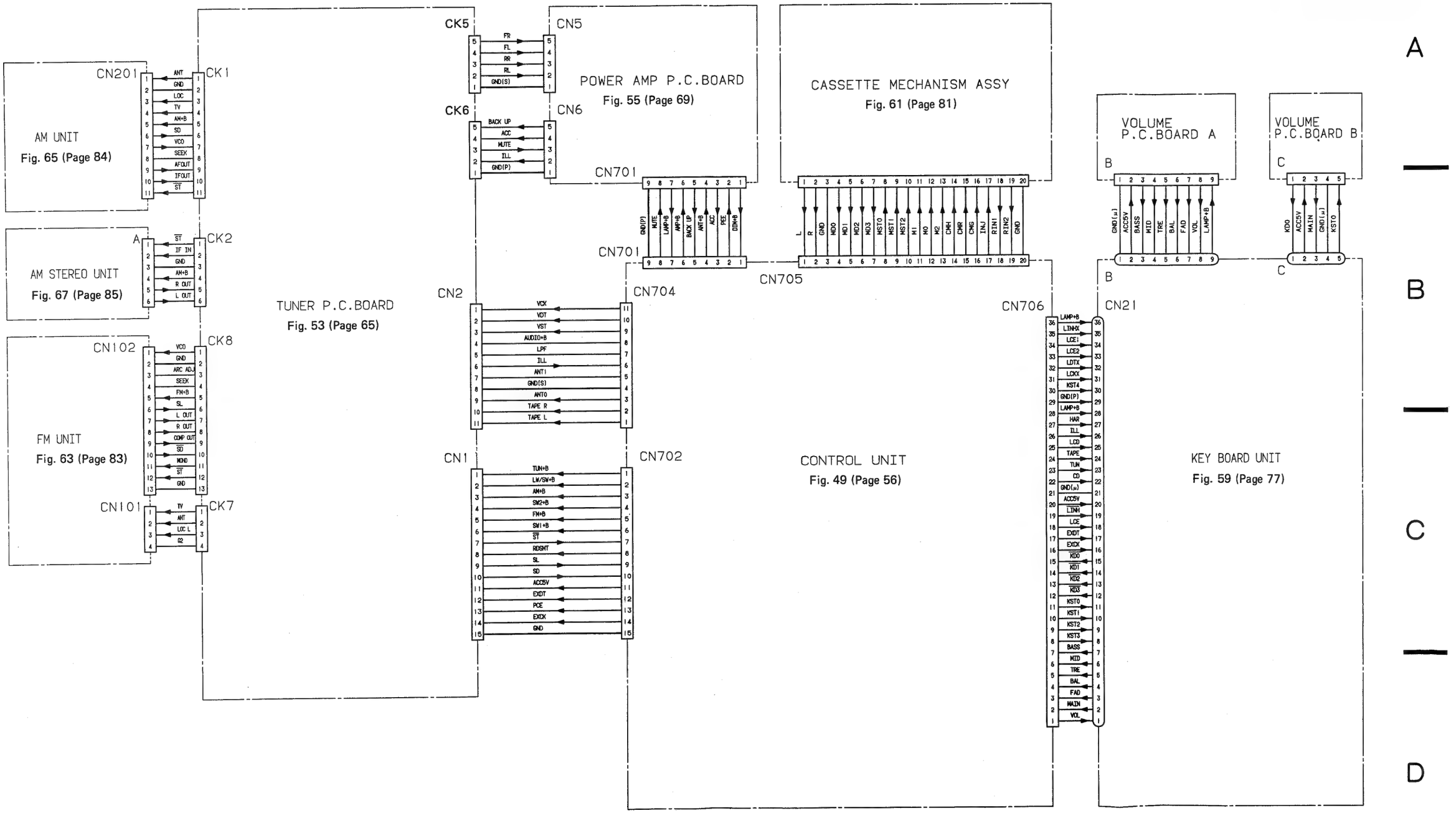

Fig. 46

10. SCHEMATIC DIAGRAM AND P.C. BOARD PATTERNS

10.1 CONTROL UNIT (KEH-M9741ZT, KEH-M9741ZT-02)

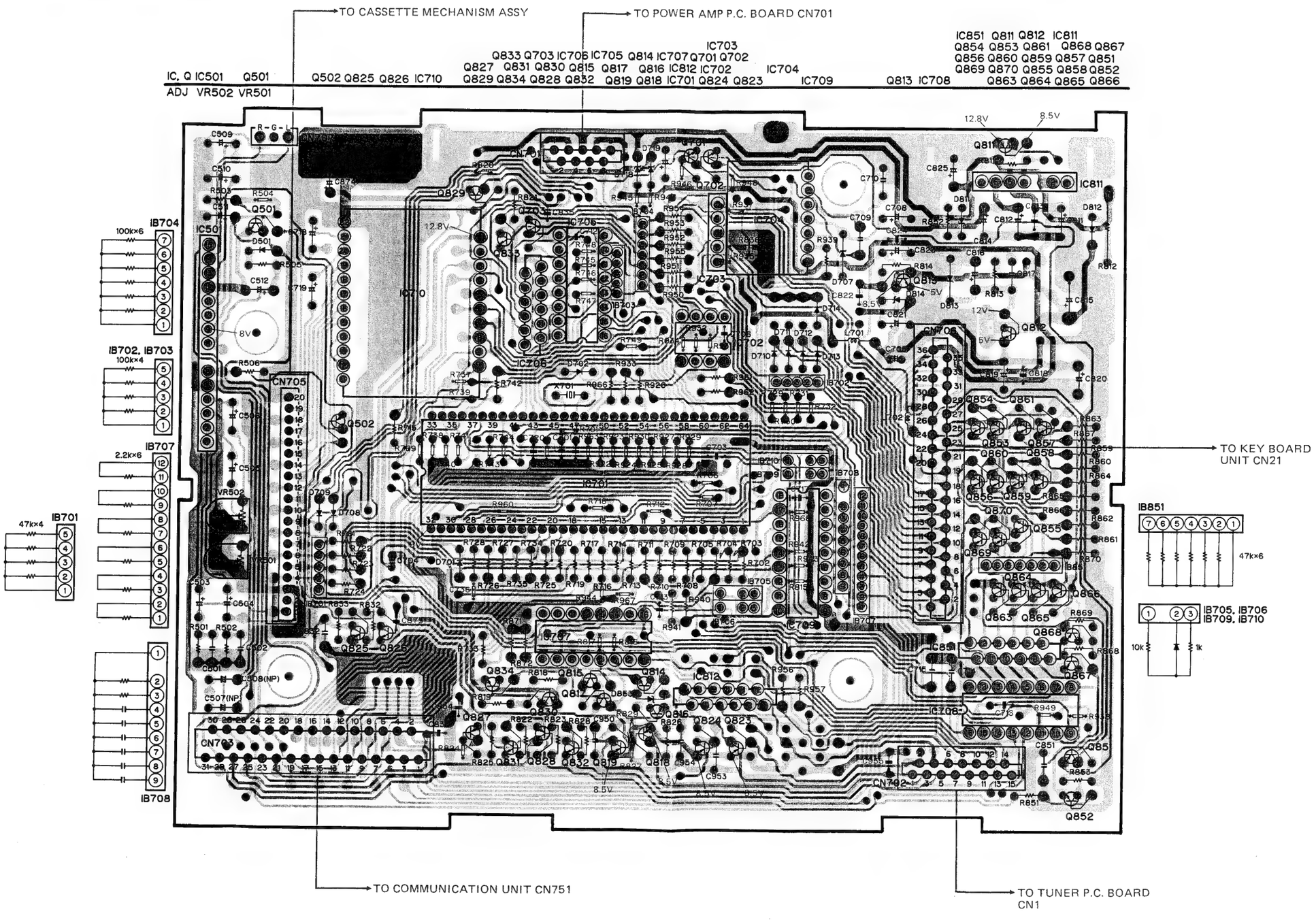

Fig. 47

CONTROL UNIT

Q501,703,831,832,833,852,867,869	DTC144ES
Q502	DTA144ES
Q701,702,816,817	2SC2458
Q811	2SB942
Q812	2SC3474
Q813	2SD1859
Q814,815	DTC144TS
Q818,819,825,830,868	2SB1243
Q823,824	DTB133HV
Q826,834	DTC114ES
Q827,828,829	2SB1243
Q851,863,864,865,866,870	DTB113ZV
Q853,854,855,856,857,858,859,860,861	2SD1859
D501,701,702,708,709,710,711,712,713,714	1SS133
D707	HZ3LLB
718,719	RD7R5JSB3
D811	RD6R2JS1
D812	ERA15-02VH
D813	HZ6LB1
D814	RD5R6JSB2
D853	RD5R1JSB1
VR501,502	VRTB6VS471

ANT +B SWITCH

AMP +B SWITCH

ANT 0/ANT 1 SWITCH

BACK UP ANT0,ANT1

SYSTEM CONTROLLER

PD4167B IC701

DECK DRIVER IC710 CWW1178

CN705

RESET IC703 M51957BL

WATCH DOG TIMER IC704 CWV1001

IB703 CWW1230 100K×4

IB702 100K×4

DECODER IC705 TC4028BP

KEY STROBE DRIVER IC706 DT5C144E

IB704 100K×6

METAL SWITCH Q502

DOLBY ADJUSTMENT POINT CN707

PRE AMP, DOLBY NR IC501 KHA147A

DOLBY NR SWITCH

TEST TAPE 315Hz 160mWb/m

−72.8dBm

−9dBm

TO CASSETTE MECHANISM ASSY

AUDIO+B

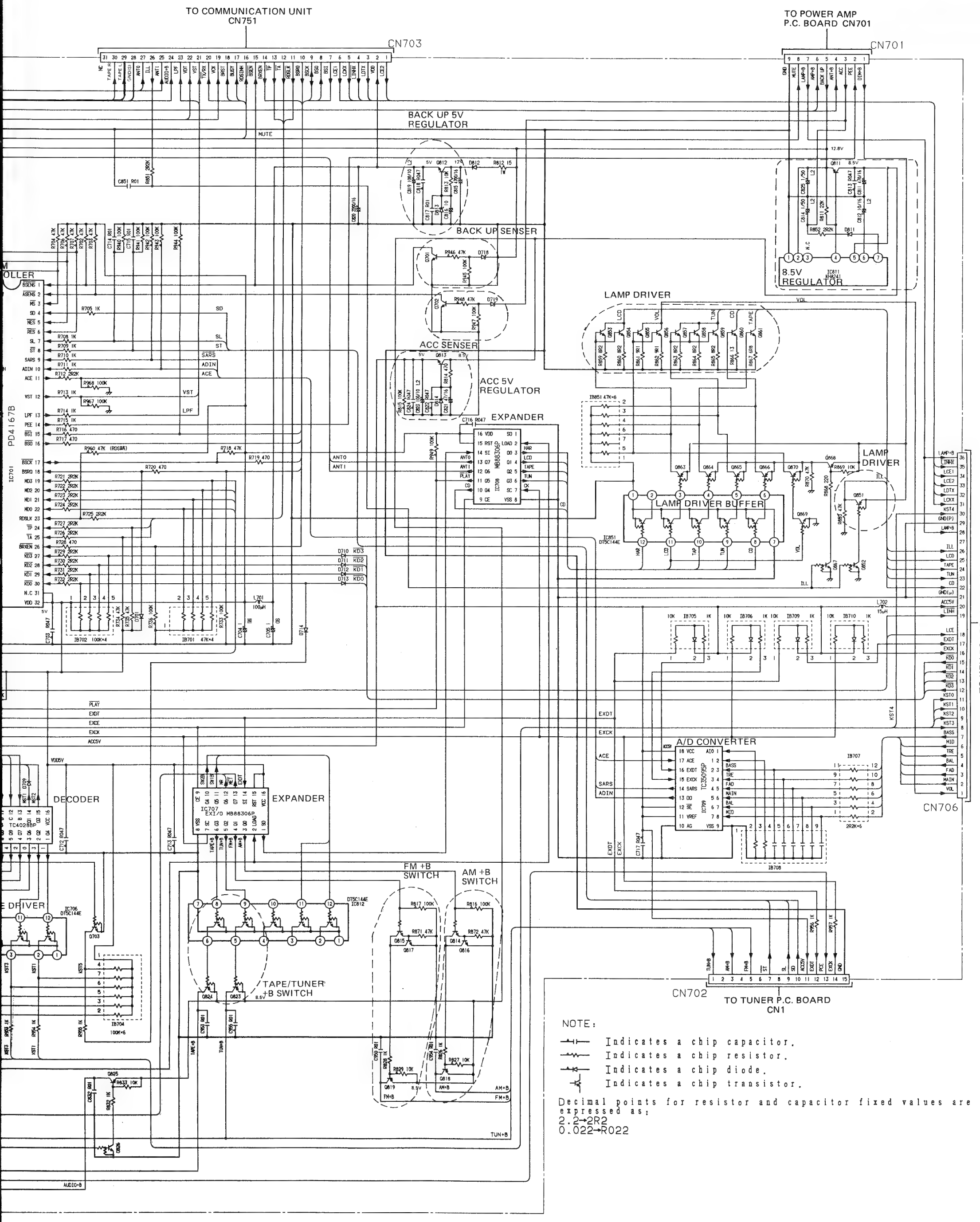

NOTE:

- Indicates a chip capacitor.
- Indicates a chip resistor.
- Indicates a chip diode.
- Indicates a chip transistor.

Decimal points for resistor and capacitor fixed values are expressed as:
2.2→2R2
0.022→R022

Fig. 48

.2 CONTROL UNIT (KEH-9641ZT, KEH-9641ZT-02)

CONTROL UNIT

Q501,703,831,832,833,852,867,869	DTC144ES
Q502	DTA144ES
Q701,702,816,817	2SC2458
Q811	2SB942
Q812	2SC3474
Q813	2SD1859
Q814,815	DTC144TS
Q818,819,825,830,868	2SB1243
Q823,824	DTB133HV
Q826,834	DTC114ES
Q827,828,829	2SB1243
Q851,863,864,865,870	DTB113ZV
Q853,854,855,856,857,858,859,861	2SD1859
D501,701,702,708,709,710,711,712,713,714	1SS133
D707	HZ3LLB
718,719	RD7R5JSB3
D811	RD6R2JS1
D812	ERA15-02VH
D813	HZ6LB1
D814	RD5R6JSB2
D853	RD5R1JSB1
VR501,502	VRTB6VS471

TO TUNER P.C.

ANT +B SWITCH

AMP +B SWITCH

ANT 0/ANT 1 SWITCH

BACK UP ANT0, ANT1

SYSTEM CONTROLLER IC701 PD4167B

DECK DRIVER IC710 CWW1178

RESET IC703 M51957BL

WATCH DOG TIMER IC704 CWW1001

DECODER IC705 TC4028BP

KEY STROBE DRIVER IC706 DT5C144E

METAL SWITCH Q502

PRE AMP, DOLBY NR IC501 KHA147A

DOLBY ADJUSTMENT POINT CN707

DOLBY NR SWITCH

TEST TAPE 315Hz 160mWb/m

−72.8dBm

−9dBm

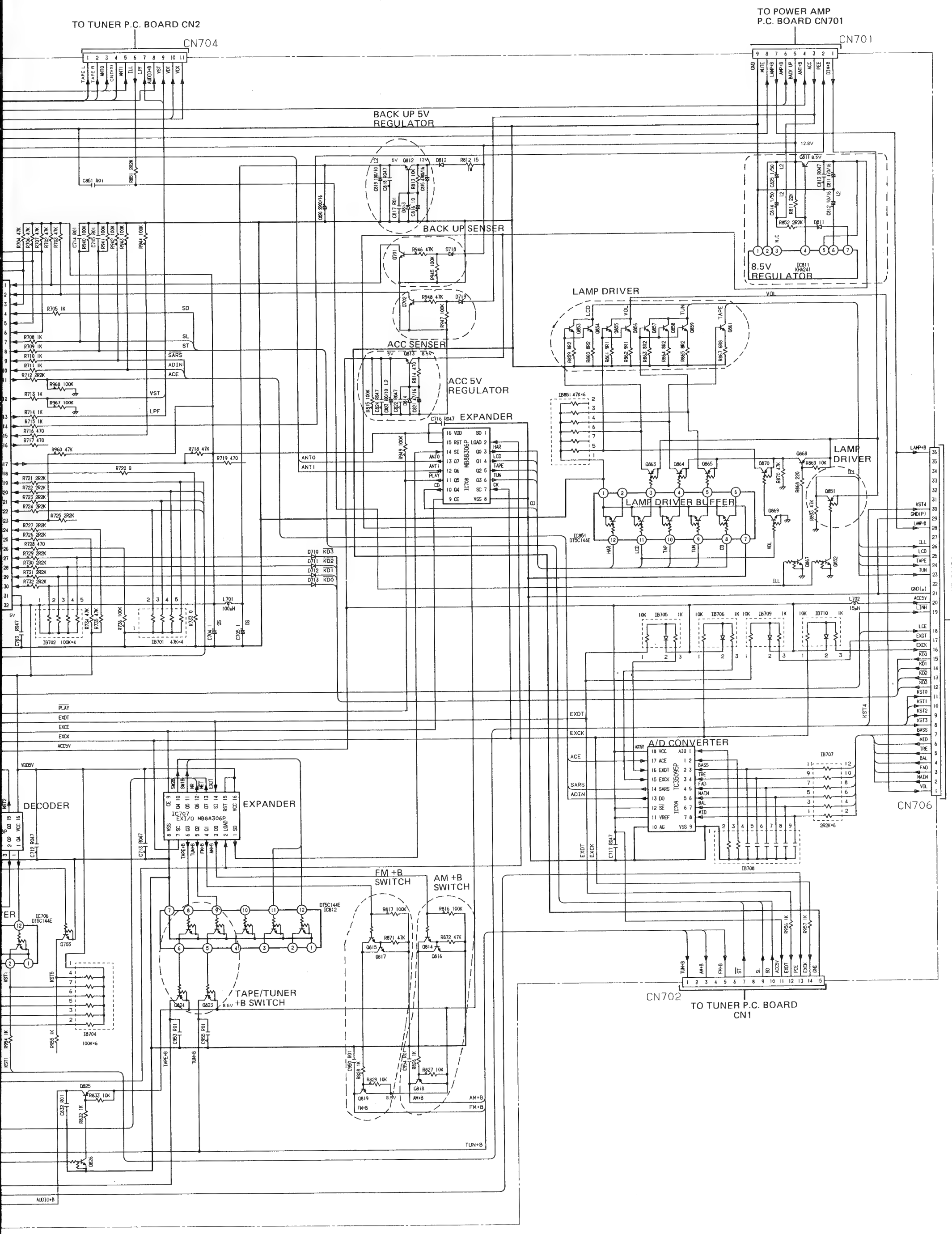
TO TUNER P.C. BOARD CN2
CN704
TAPE L
TAPE R
ANTO
GND(S)
ANTI
ILL
LPF
AUDIO+B
VST
VDT
VCK
TO POWER AMP P.C. BOARD CN701
CN701
GND
MUTE
LAMP+B
AMP+B
BACK UP
ANT+B
ACC
PEE
DIM+B
BACK UP 5V REGULATOR
BACK UP SENSER
8.5V REGULATOR
IC811 KIA7241
LAMP DRIVER
LAMP DRIVER BUFFER
IC851 DT5C144E
ACC SENSER
ACC 5V REGULATOR
EXPANDER
MB88306P
IC708
A/D CONVERTER
TC35095P
IC709
DECODER
IC706 DT5C144E
EXPANDER
IC707 EXT/O MB88306P
FM +B SWITCH
AM +B SWITCH
TAPE/TUNER +B SWITCH
IC704 DT5C144E
IB704 100K×6
IB702 100K×4
IB701 47K×4
IB851 47K×6
IB705 1K
IB706 1K
IB709 1K
IB710 1K
IB707 2R2K×6
IB708
L701 100μH
L702 15μH
CN706
TO KEY BOARD UNIT CN21
CN702
TO TUNER P.C. BOARD CN1
SD
SL
ST
SARS
ADIN
ACE
VST
LPF
PLAY
EXDT
EXCE
EXCK
ACC5V
VDD5V
FM+B
AM+B
TUN+B
TAPE+B
AUDIO+B
KD0
KD1
KD2
KD3
KST0
KST1
KST2
KST3
KST4
KST5
BASS
MID
TRE
BAL
FAD
MAIN
VOL
LCE
LINH
ANTO
ANTI
CD
HAR
LCD
TAPE
TUN
CK
ILL
12.8V
8.5V
5V

Fig. 49

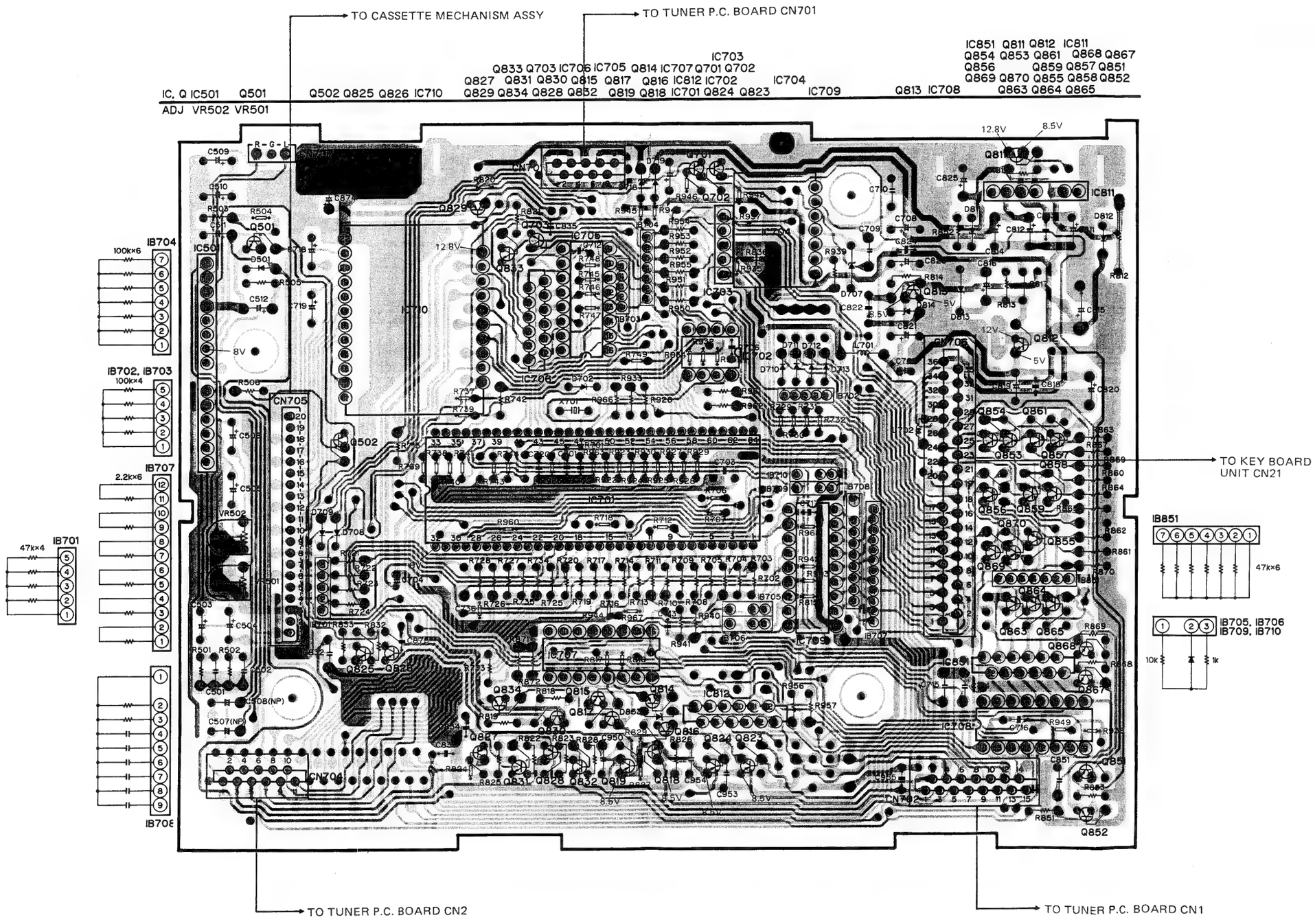
TO CASSETTE MECHANISM ASSY
TO TUNER P.C. BOARD CN701
IC, Q IC501 Q501
ADJ VR502 VR501
Q502 Q825 Q826 IC710
Q833 Q703 IC706 IC705 Q814 IC707 Q701 Q702
Q827 Q831 Q830 Q815 Q817 Q816 IC812 IC702
Q829 Q834 Q828 Q832 Q819 Q818 IC701 Q824 Q823
IC703
IC704
IC709
Q813 IC708
IC851 Q811 Q812 IC811
Q854 Q853 Q861 Q868 Q867
Q856 Q859 Q857 Q851
Q869 Q870 Q855 Q858 Q852
Q863 Q864 Q865
IB704
100k×6
IB702, IB703
100k×4
IB707
2.2k×6
IB701
47k×4
IB708
TO KEY BOARD UNIT CN21
IB851
47k×6
IB705, IB706
IB709, IB710
10k
1k
TO TUNER P.C. BOARD CN2
TO TUNER P.C. BOARD CN1

Fig. 50

10.3 TUNER P.C. BOARD (KEH-M9741ZT, KEH-M9741ZT-02)

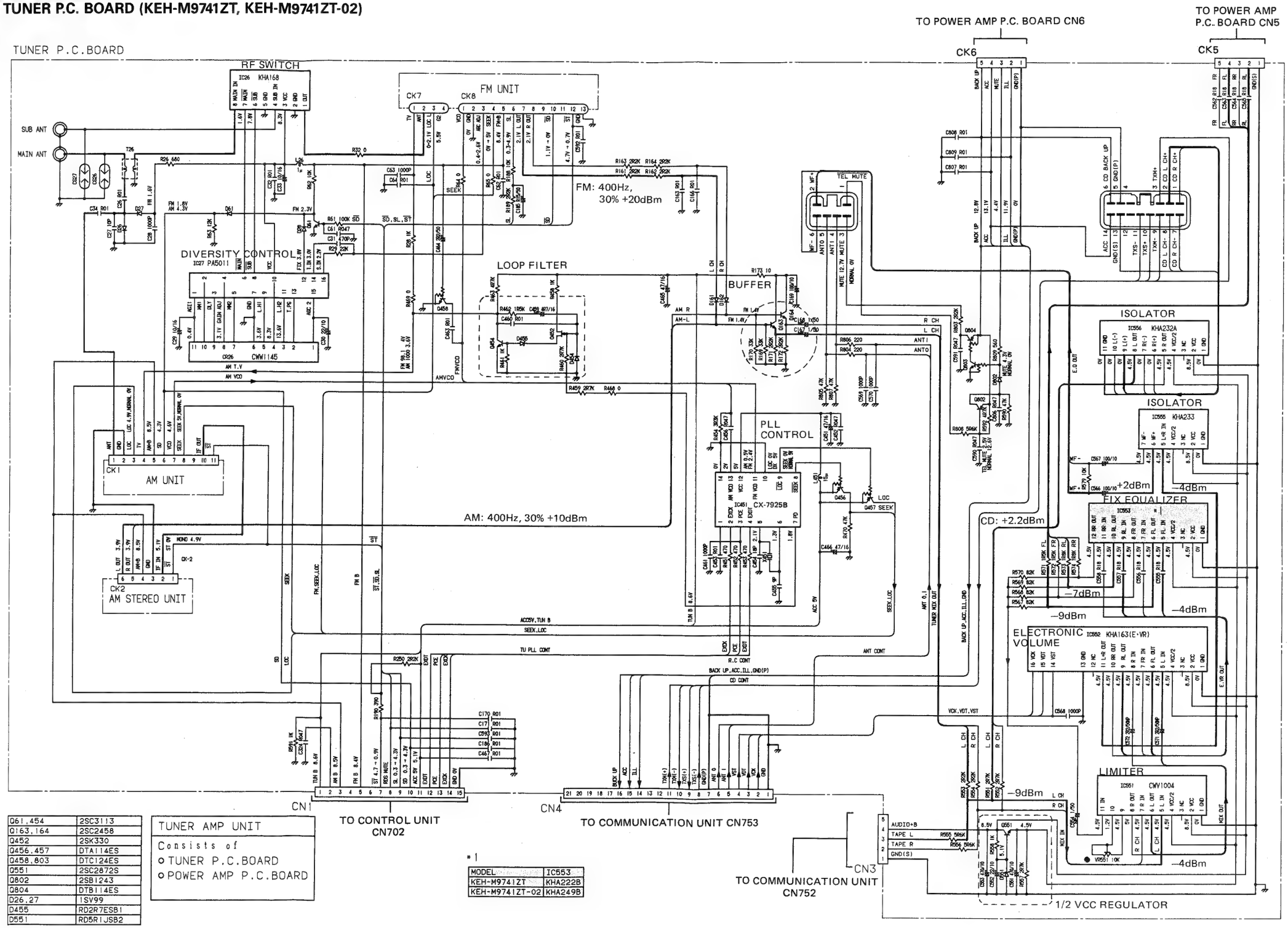

Q61,454	2SC3113
Q163,164	2SC2458
Q452	2SK330
Q456,457	DTA114ES
Q458,803	DTC124ES
Q551	2SC2872S
Q802	2SB1243
Q804	DTB114ES
D26,27	1SV99
D455	RD2R7ESB1
D551	RD5R1JSB2

TUNER AMP UNIT

Consists of
- TUNER P.C.BOARD
- POWER AMP P.C.BOARD

*1

MODEL	IC553
KEH-M9741ZT	KHA222B
KEH-M9741ZT-02	KHA249B

Fig. 51

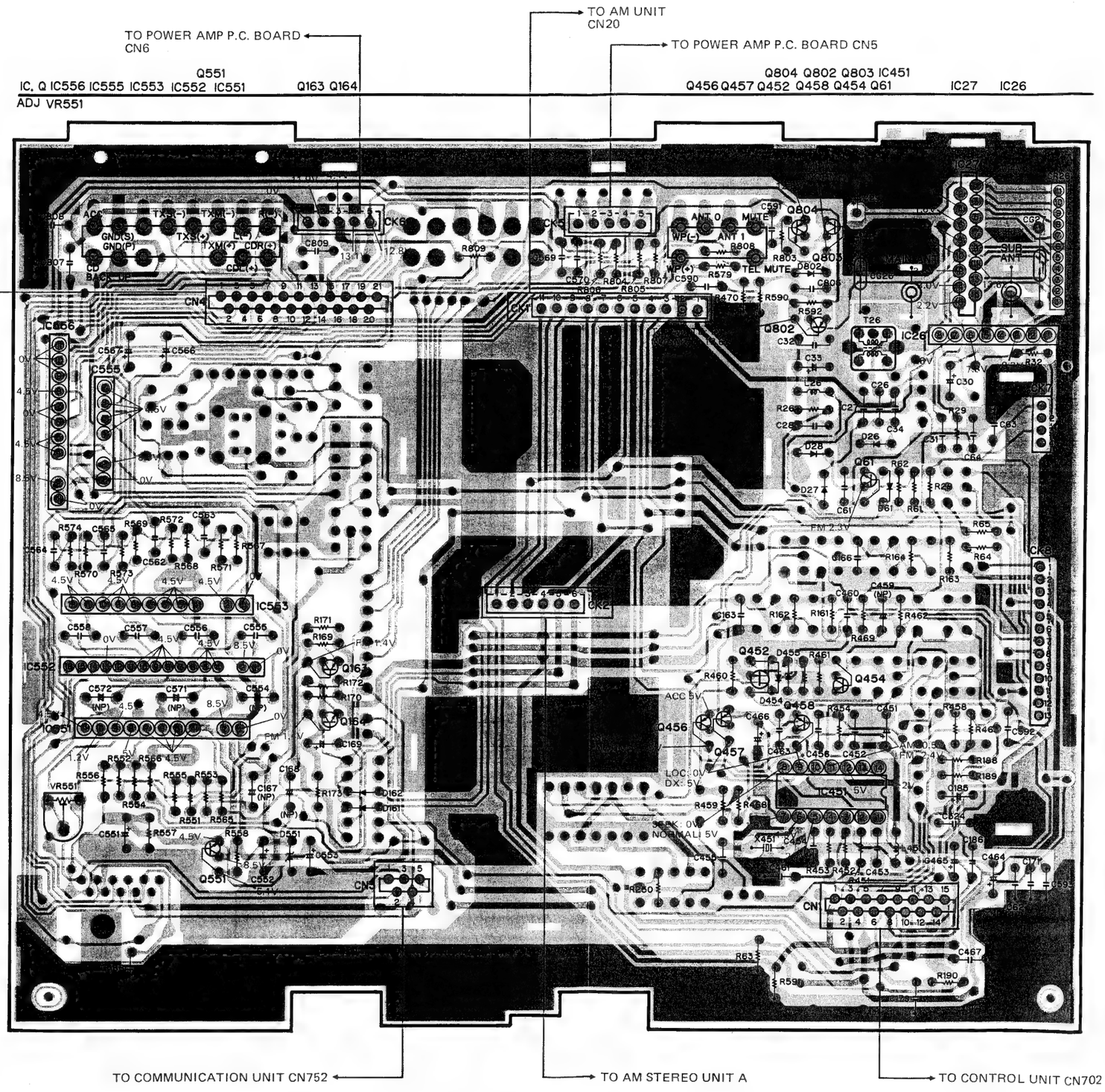
TO AM UNIT CN20
TO POWER AMP P.C. BOARD CN6
TO POWER AMP P.C. BOARD CN5
Q551
IC. Q IC556 IC555 IC553 IC552 IC551
Q163 Q164
ADJ VR551
Q804 Q802 Q803 IC451
Q456 Q457 Q452 Q458 Q454 Q61
IC27
IC26
TO COMMUNICATION UNIT CN753
TO COMMUNICATION UNIT CN752
TO AM STEREO UNIT A
TO CONTROL UNIT CN702

Fig. 52

10.4 TUNER P.C. BOARD (KEH-9641ZT, KEH-9641ZT-02)

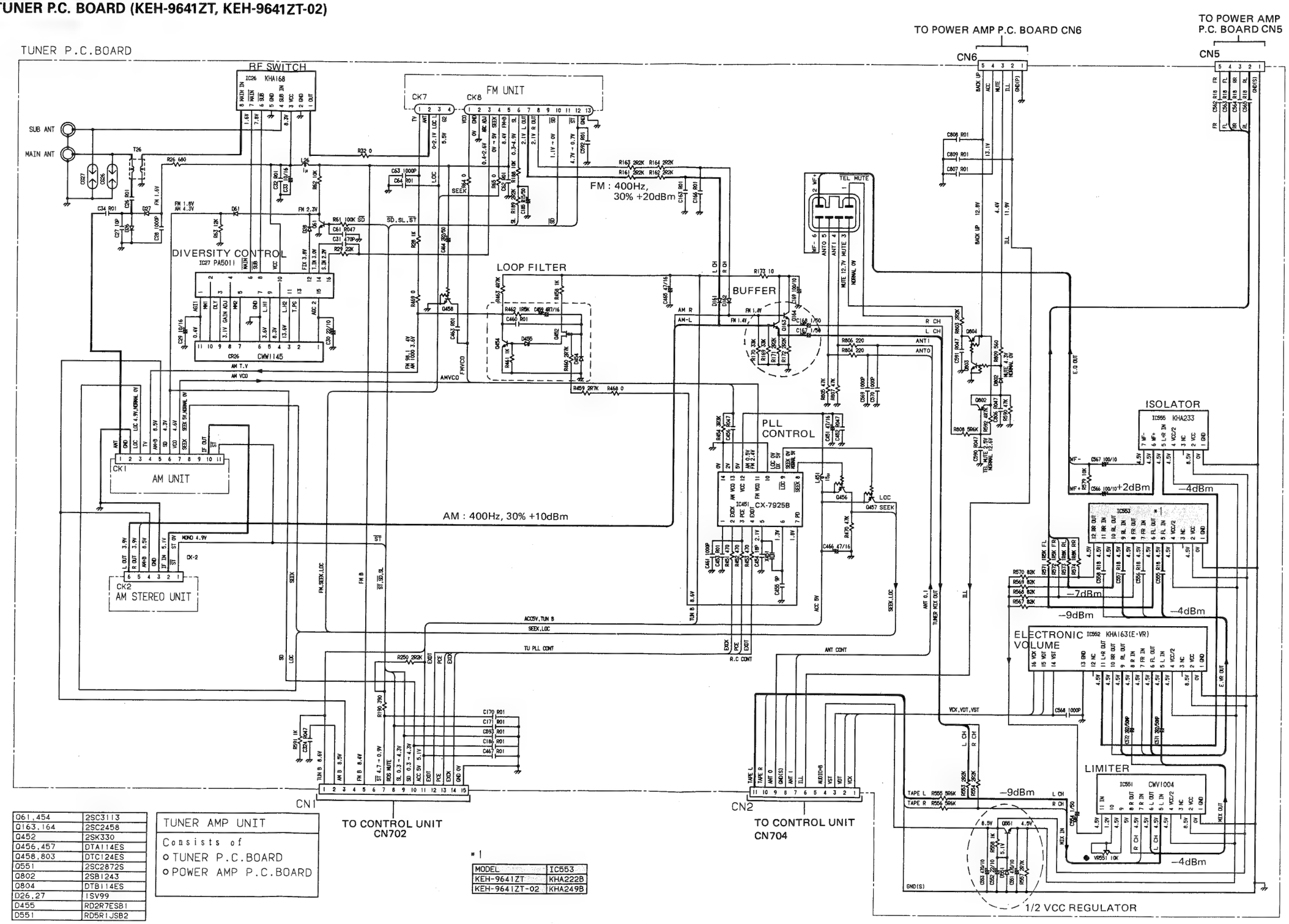

Q61,454	2SC3113
Q163,164	2SC2458
Q452	2SK330
Q456,457	DTA114ES
Q458,803	DTC124ES
Q551	2SC2872S
Q802	2SB1243
Q804	DTB114ES
D26,27	1SV99
D455	RD2R7ESB1
D551	RD5R1JSB2

*1

MODEL	IC553
KEH-9641ZT	KHA222B
KEH-9641ZT-02	KHA249B

Fig. 53

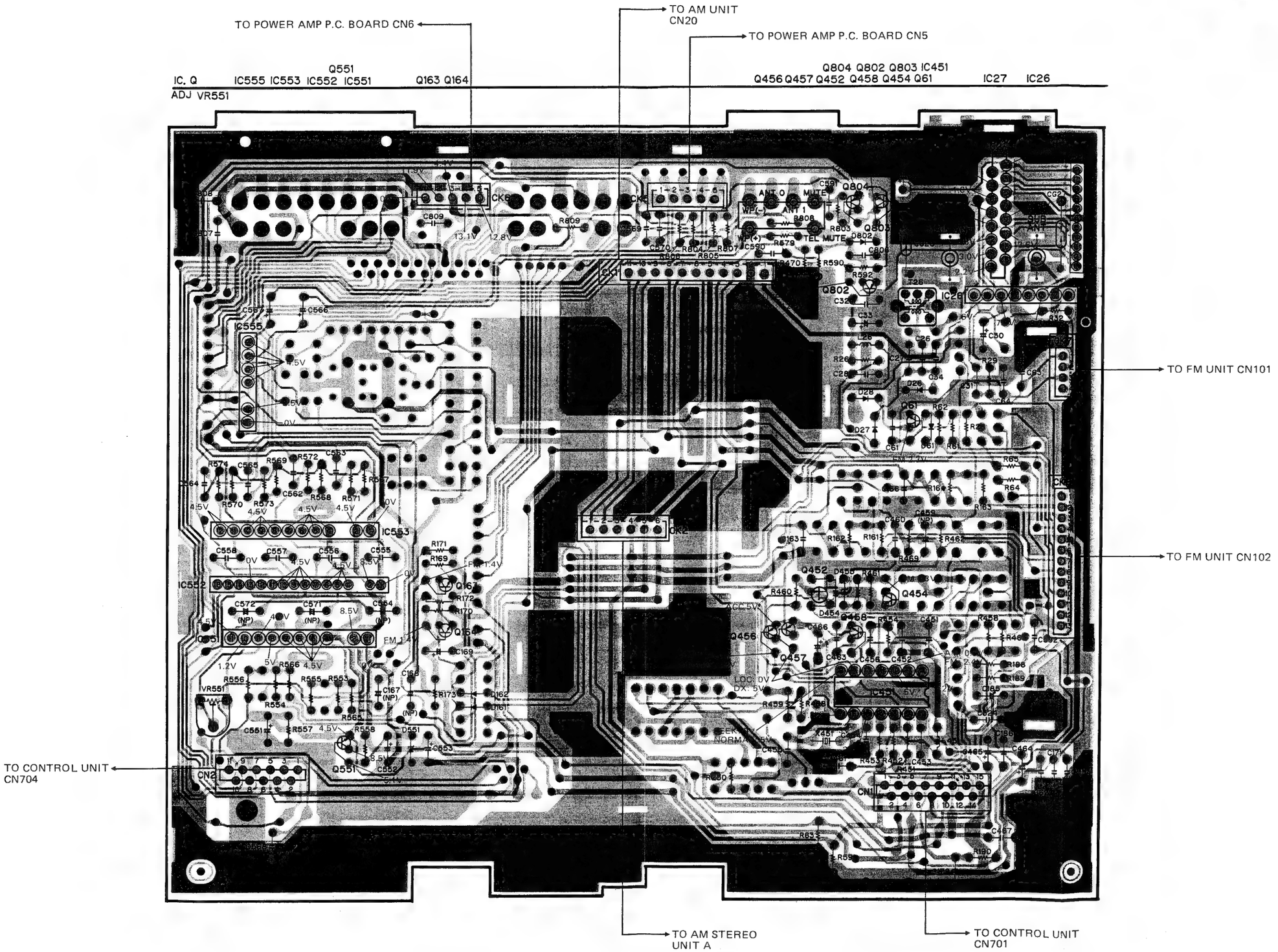
TO POWER AMP P.C. BOARD CN6
TO AM UNIT CN20
TO POWER AMP P.C. BOARD CN5
IC. Q
Q551
IC555 IC553 IC552 IC551
Q163 Q164
Q804 Q802 Q803 IC451
Q456 Q457 Q452 Q458 Q454 Q61
IC27
IC26
ADJ VR551
TO FM UNIT CN101
TO FM UNIT CN102
TO CONTROL UNIT CN704
TO AM STEREO UNIT A
TO CONTROL UNIT CN701

Fig. 54

10.5 POWER AMP P.C. BOARD

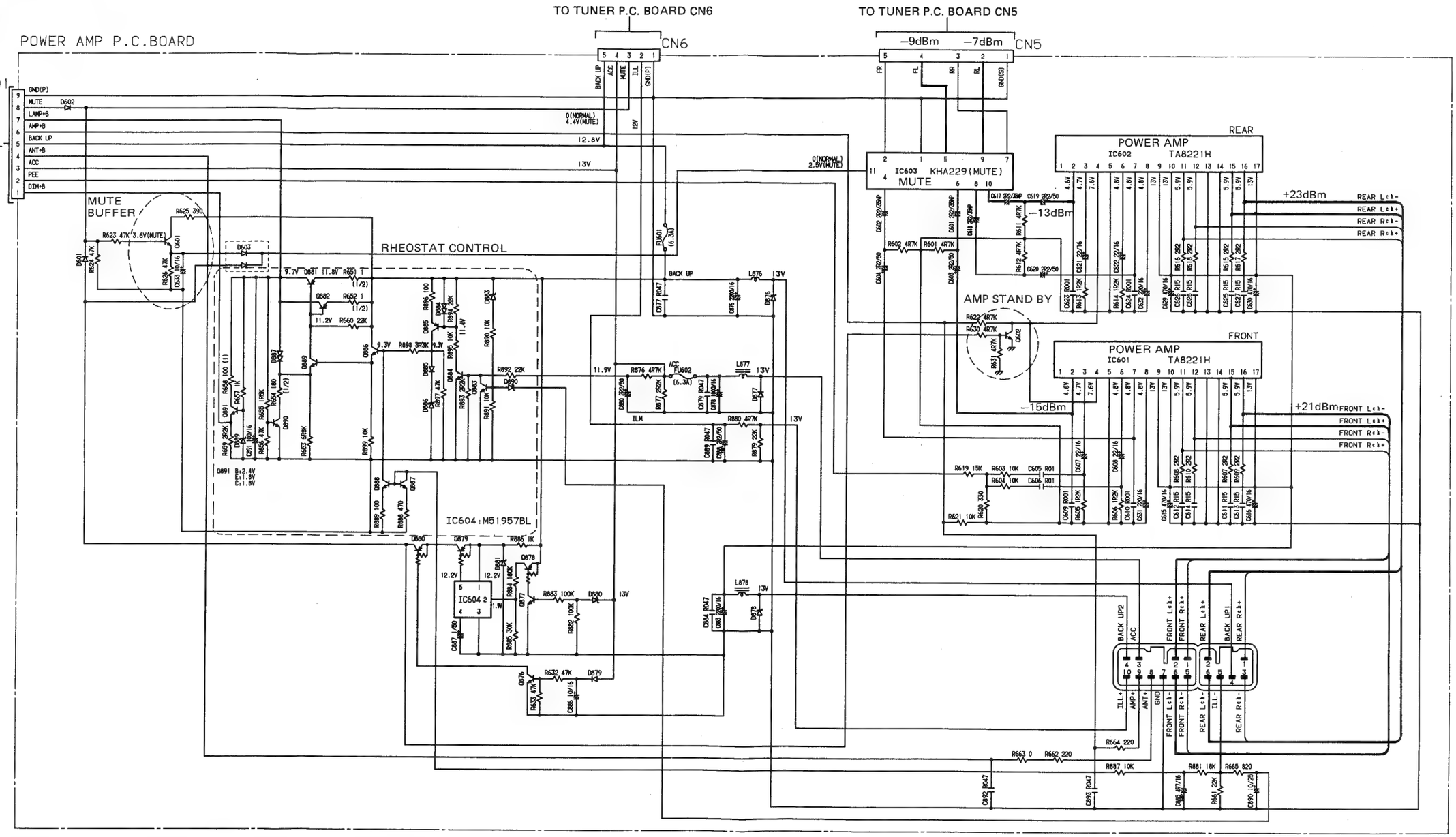

D551	RD5R1JSB2
D601,602,802,879,885	1SS133
D603	MA204WK
D876,878	5Z27LC
D877	SM3-08LFEA
D880	RD8R2JSB2
D881,883	MTZ18JB
D884,887	MA206
D886	RD8R2JSB2
D890	RD9R1JSB2
D899	HZ2CLL

Q601,602	2SC3665
Q876,877	2SC1740S
Q878,879,880	DTA114ES
Q881,882	2SB942
Q883,884,886,887,888,890	2SC2458
Q885	2SA1048
Q889,891	2SD1859
FU601,602	CEK1008

TUNER AMP UNIT

Consists of
- TUNER P.C.BOARD
- POWER AMP P.C.BOARD

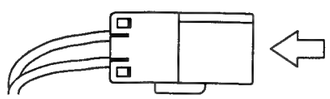

Connection is viewed from the direction of the arrow.

Fig. 55

Q879 Q878
Q880 Q876 IC603
IC. Q Q601 Q602 IC604 Q877 IC602

Q887 Q888 Q881 Q891 Q886 Q882 Q884
Q890 Q885 Q889 Q883

IC601

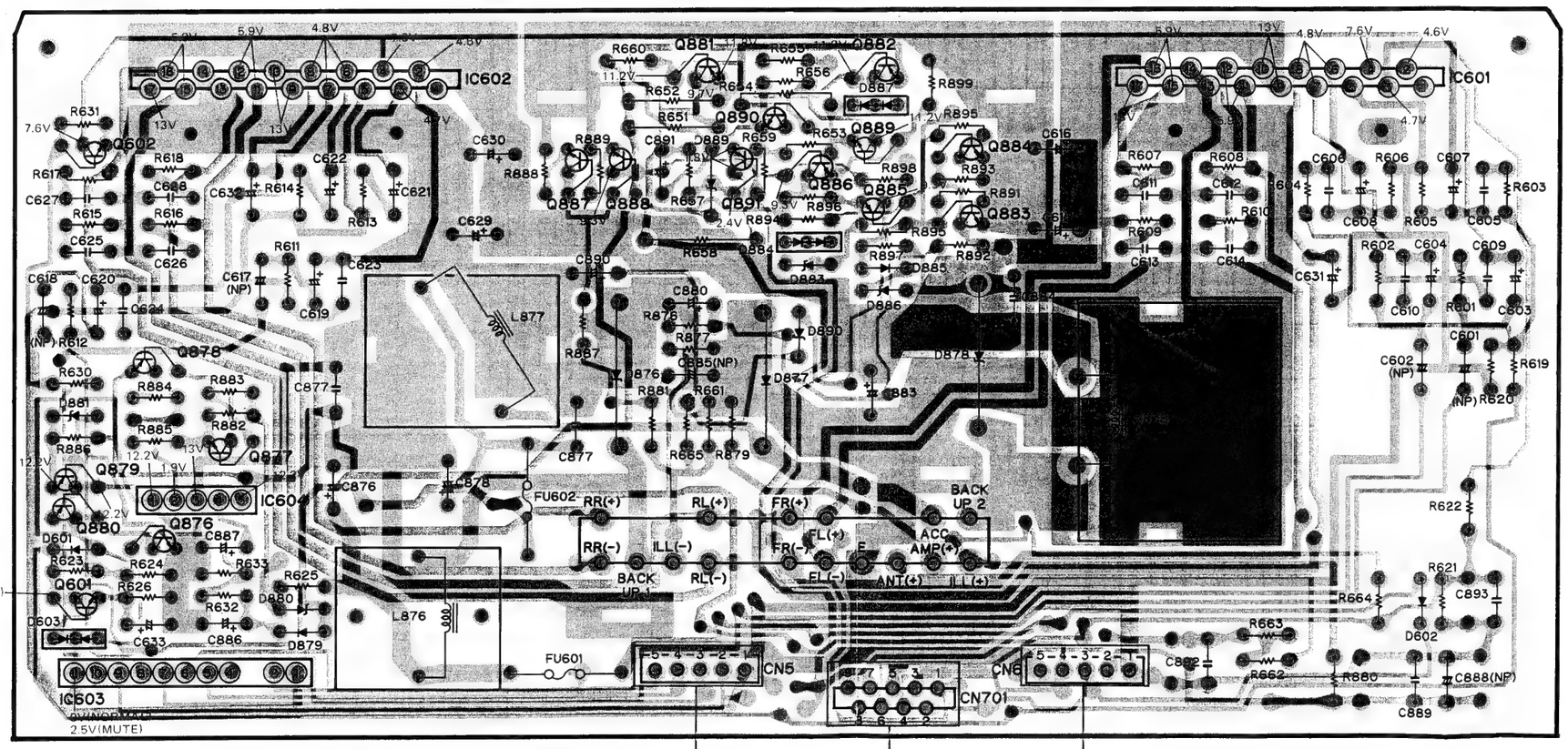

Fig. 56

10.6 COMMUNICATION UNIT (KEH-M9741ZT, KEH-M9741ZT-02)

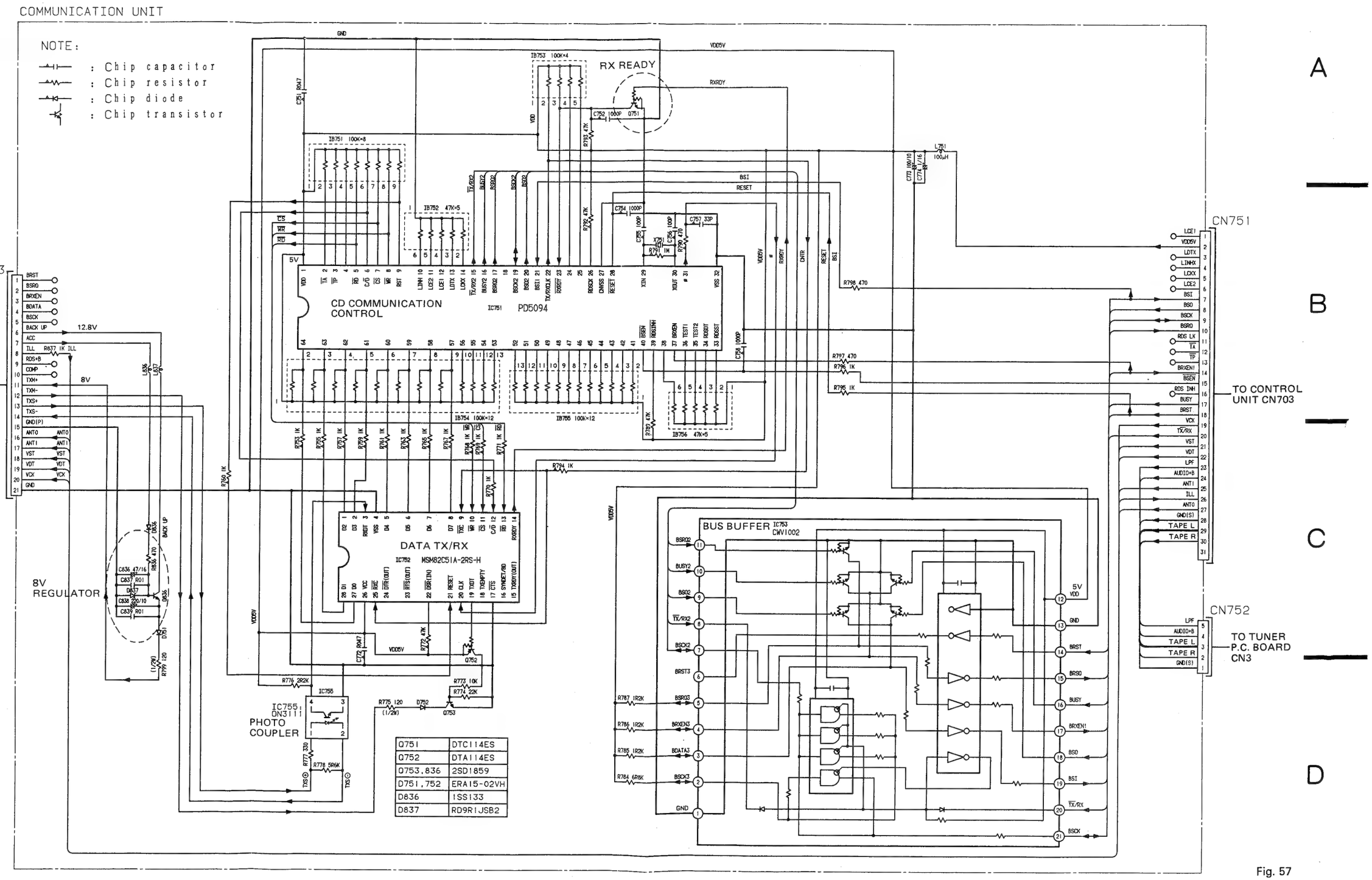

Fig. 57

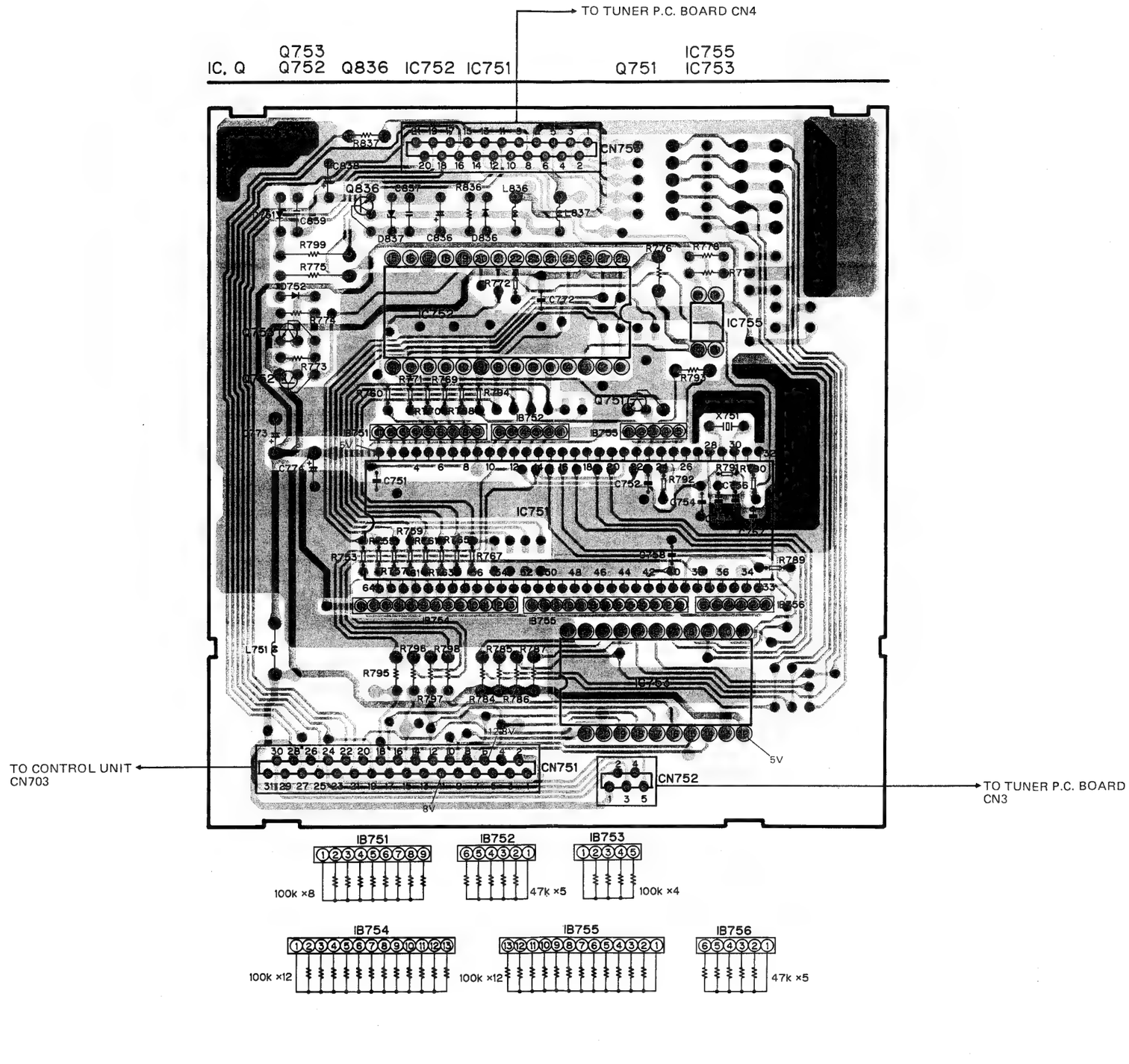
TO TUNER P.C. BOARD CN4
IC, Q
Q753
Q752
Q836
IC752
IC751
Q751
IC755
IC753
CN750
TO CONTROL UNIT
CN703
CN751
CN752
TO TUNER P.C. BOARD
CN3
IB751
100k ×8
IB752
47k ×5
IB753
100k ×4
IB754
100k ×12
IB755
100k ×12
IB756
47k ×5

Fig. 58

10.7 KEY BOARD UNIT AND VOLUME UNIT

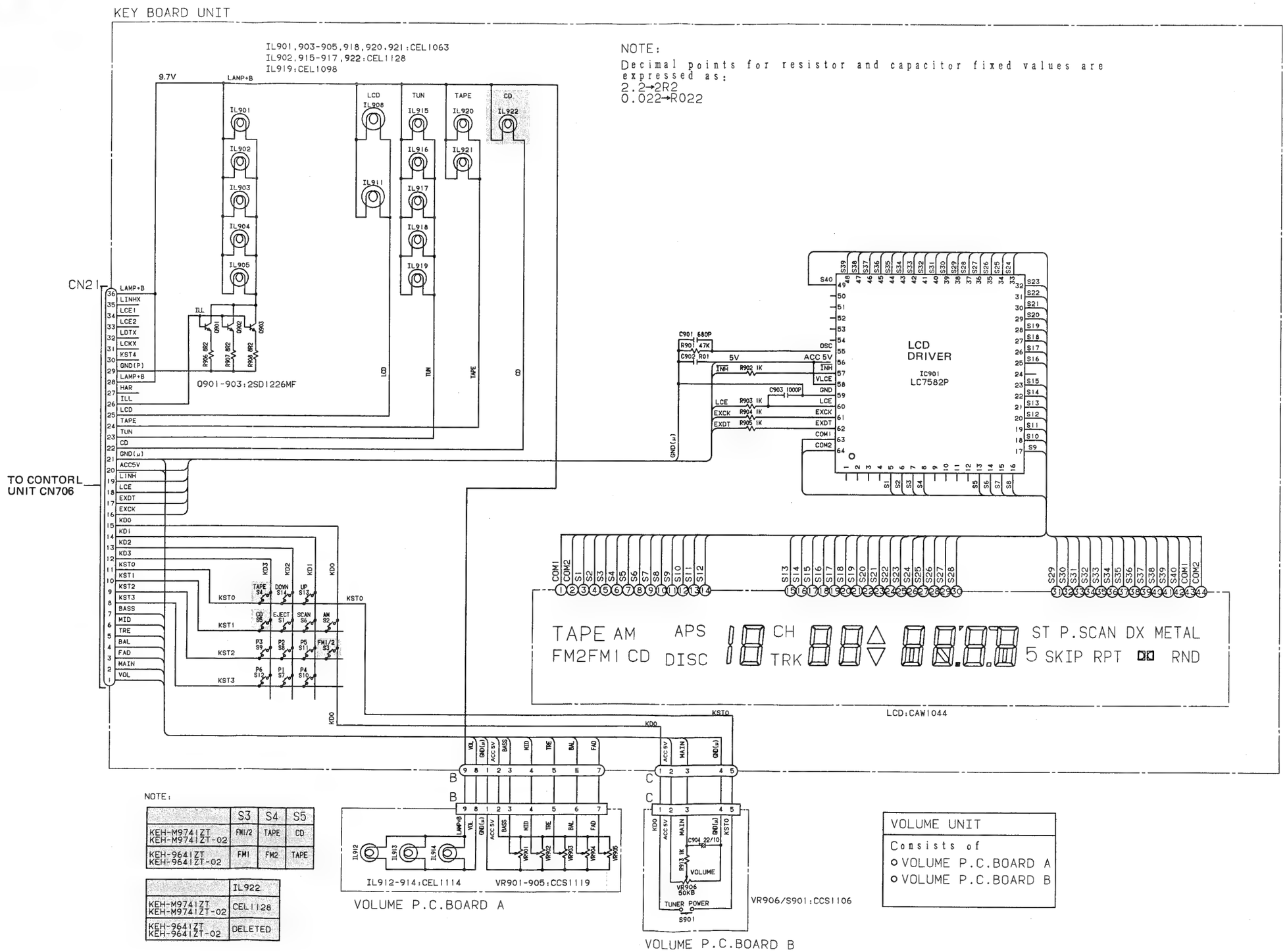

NOTE:

	S3	S4	S5
KEH-M9741ZT KEH-M9741ZT-02	FM1/2	TAPE	CD
KEH-9641ZT KEH-9641ZT-02	FM1	FM2	TAPE

	IL922
KEH-M9741ZT KEH-M9741ZT-02	CEL1128
KEH-9641ZT KEH-9641ZT-02	DELETED

Fig. 59

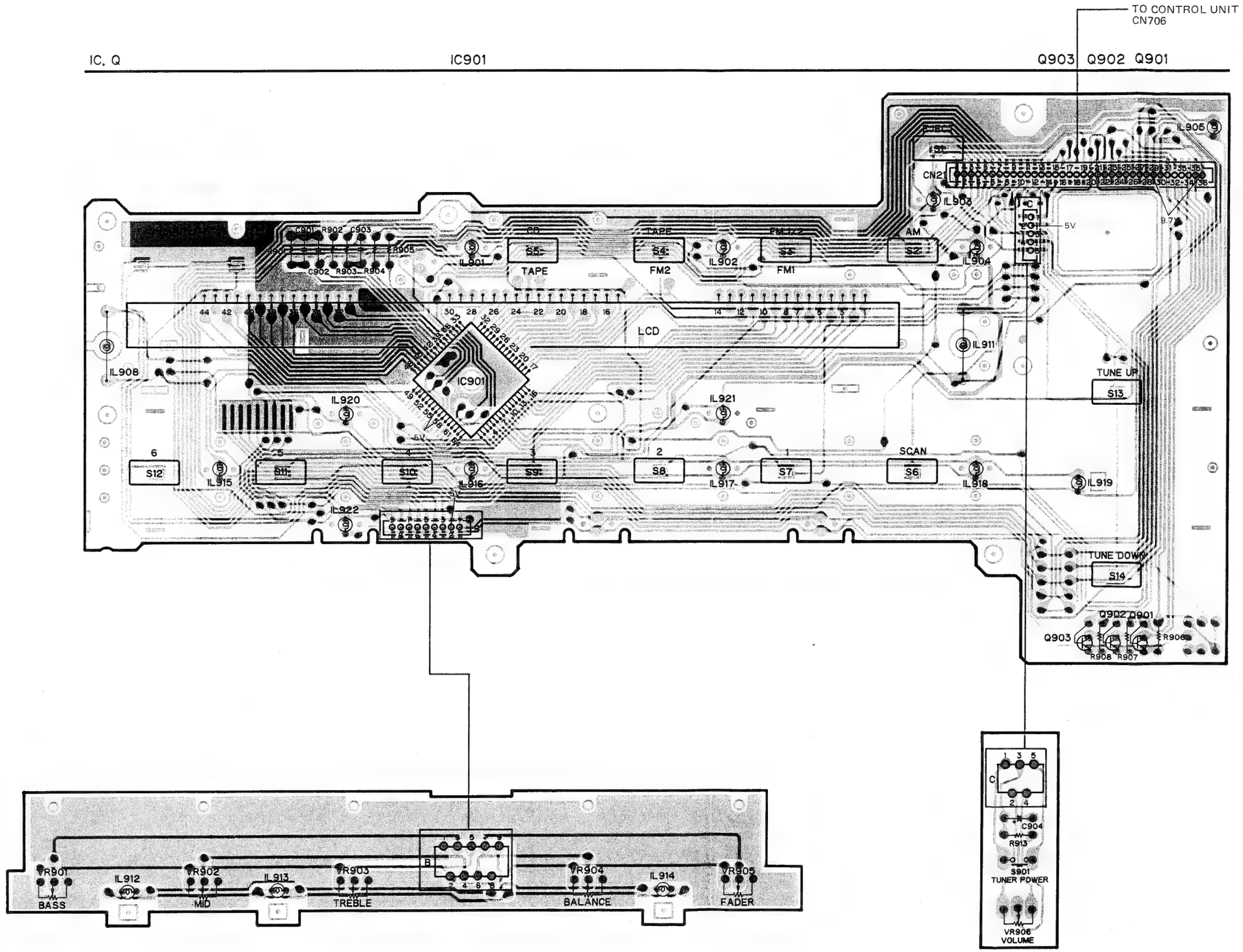
TO CONTROL UNIT
CN706
IC, Q
IC901
Q903 Q902 Q901
IL905
CN21
IL903
IL904
AM
S2
FM1
S3
FM2
S4
TAPE
S5
CD
IL901
IL902
LCD
IC901
IL908
IL920
IL921
IL911
TUNE UP
S13
SCAN
S6
S7
S8
S9
S10
S11
S12
IL915
IL916
IL917
IL918
IL919
IL922
TUNE DOWN
S14
Q902 Q901
Q903
R906
R908 R907
VR901
BASS
IL912
VR902
MID
IL913
VR903
TREBLE
VR904
BALANCE
IL914
VR905
FADER
C904
R913
S901
TUNER POWER
VR906
VOLUME

Fig. 60

10.8 CASSETTE MECHANISM ASSY

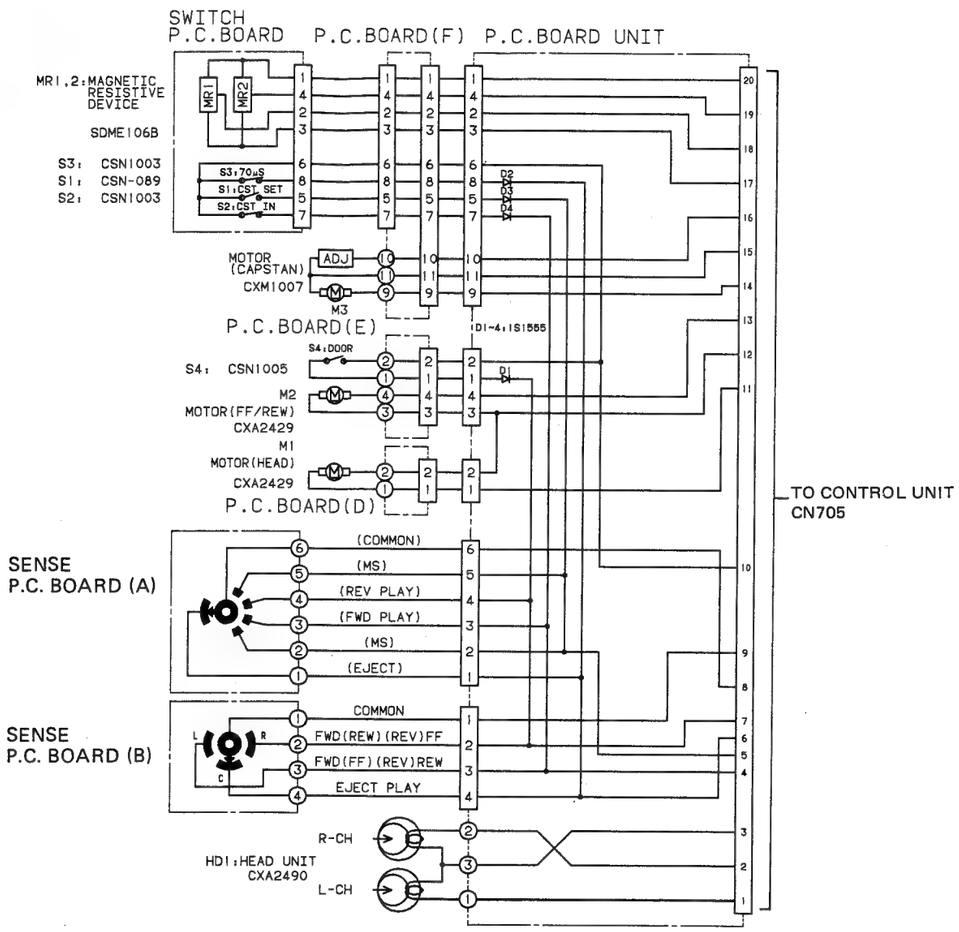

Fig. 61

SWITCHES:

SWITCH P.C. BOARD

S1: CST SET SWITCH ..... ON—OFF
S2: CST IN SWITCH ..... ON—OFF
S3: 70μS SWITCH ..... ON—OFF

MISCELLANEOUS

S4: DOOR SWITCH ..... ON—OFF

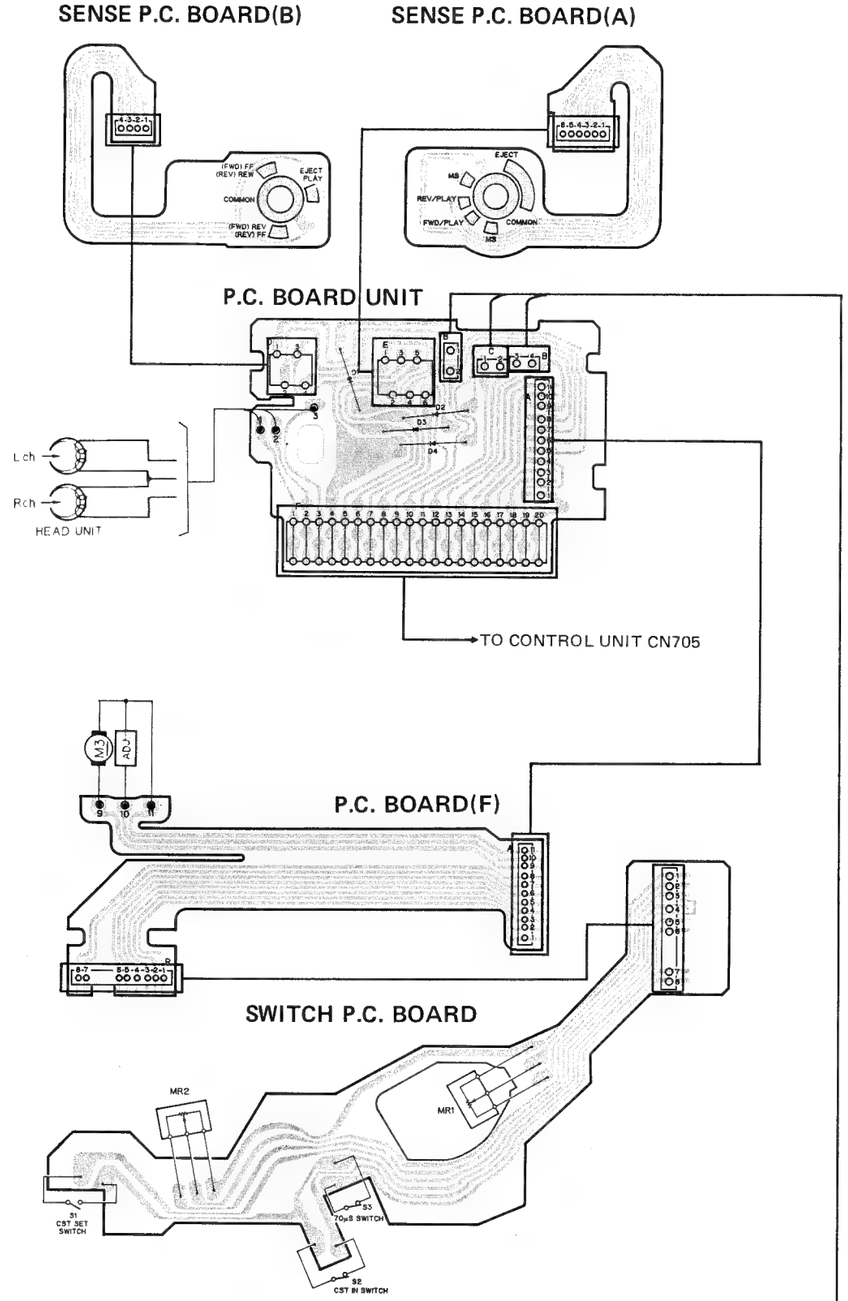

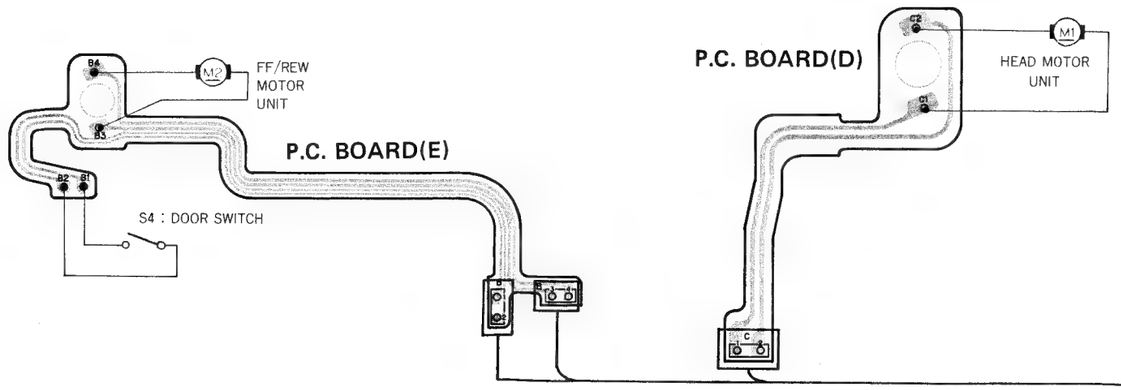

Fig. 62

10.9 FM UNIT

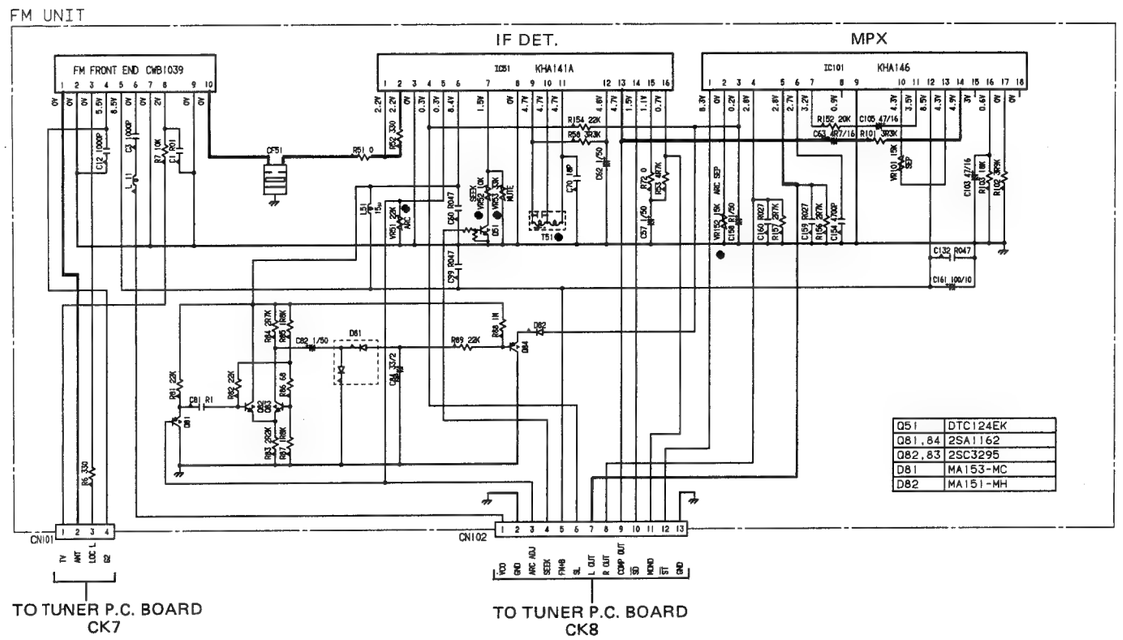

Fig. 63

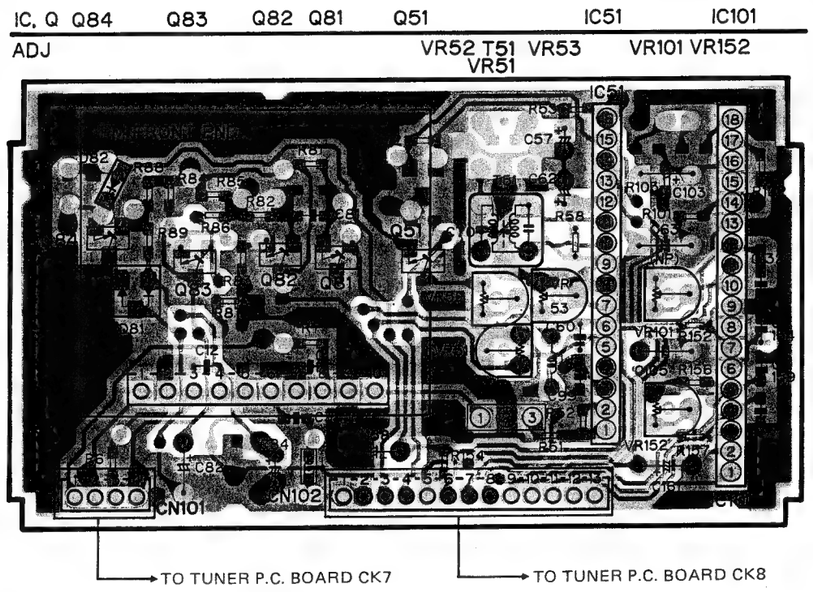

Fig. 64

10.10 AM UNIT

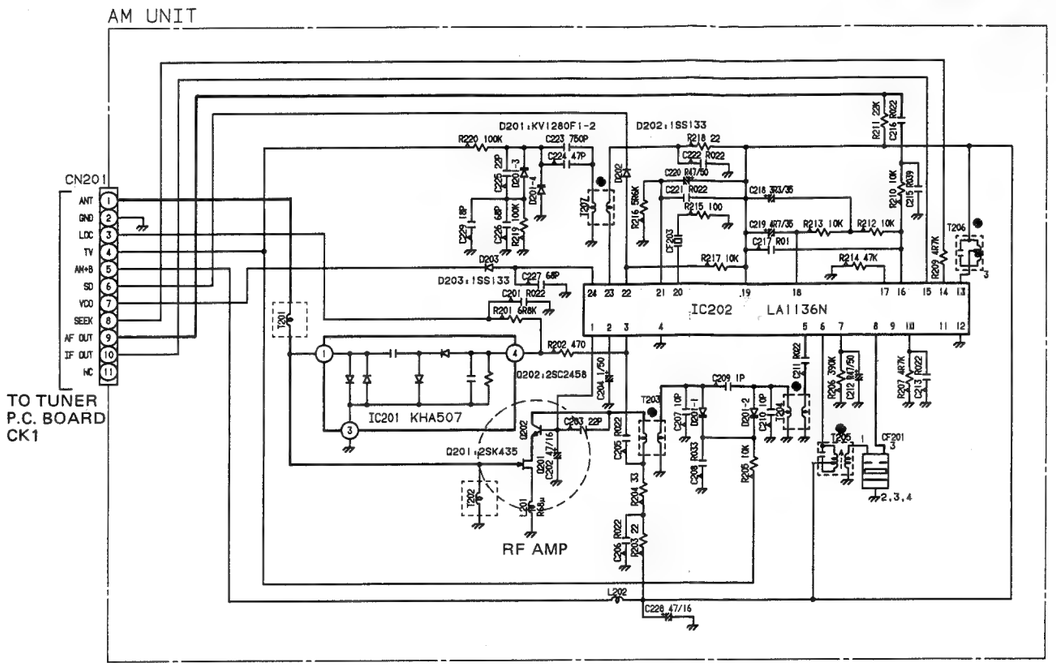

NOTE:

Indicates a chip capacitor.
Indicates a chip resistor.
Indicates a chip diode.
Indicates a chip transistor.

Decimal points for resistor and capacitor fixed values are expressed as:
2.2→2R2
0.022→R022

IC201

NO.	(V)
1	6.0
2	0
3	0
4	0
5	2.0
6	8.4
7	5.3
8	1.5
9	6.2
10	2.0
11	1.5
12	4.7
13	8.4
14	0
15	5.1
16	4.5
17	0
18	4.5
19	8.4
20	2.9
21	0
22	4.8
23	8.4
24	5.1

Fig. 65

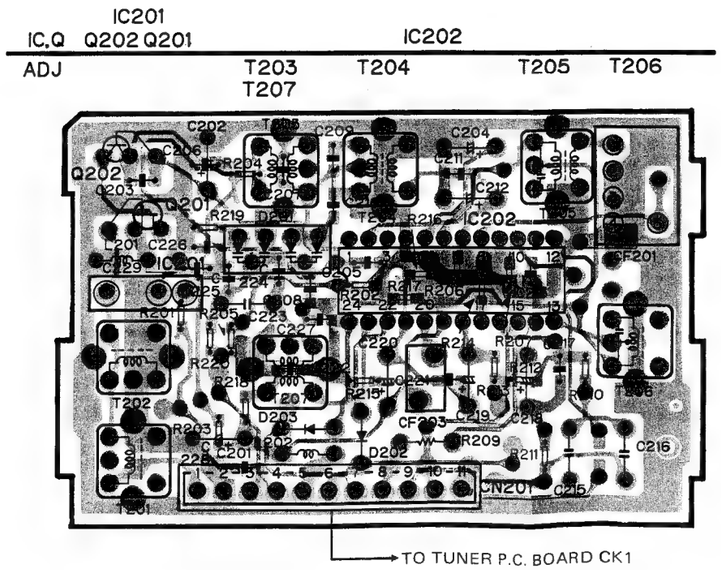

Fig. 66

10.11 AM STEREO UNIT

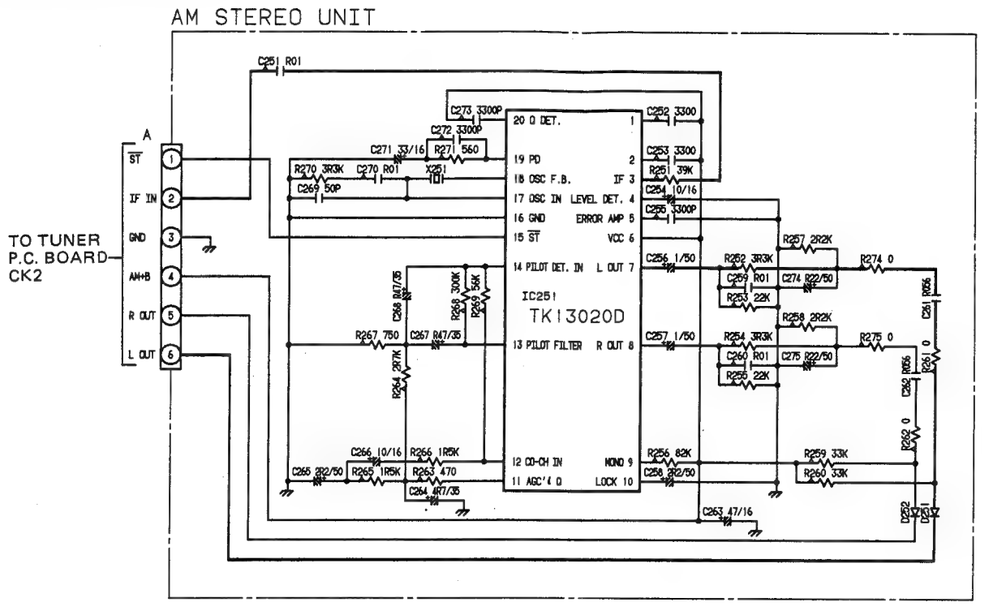

IC251

NO.	(V)
1	6.5
2	6.5
3	3.6
4	2.8
5	2.4
6	8.5
7	1.2
8	1.3
9	8.4
10	8.4
11	1.9
12	0.5
13	0.5
14	0.5
15	0/5
16	0
17	2.9
18	7.2
19	3.9
20	6.0

Fig. 67

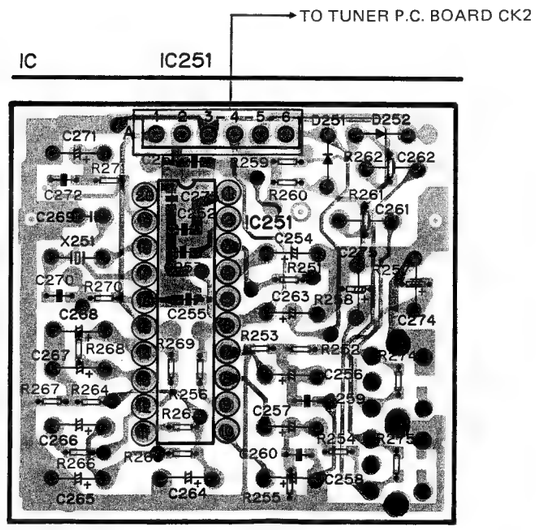

Fig. 68

11. CHASSIS EXPLODED VIEW (1)

- **Parts List**

NOTE:

- *For your parts Stock Control, the fast moving items are indicated with the marks ‡‡ and ‡.*
  ‡‡ : GENERALLY MOVES FASTER THAN ‡.
  This classification shall be adjusted by each distributor because it depends on model number, temperature, humidity, etc.
- *Parts whose parts numbers are omitted are subject to being not supplied.*
- *Parts marked by "◉" are not always kept in stock. Their delivery time may be longer than usual or they may be unavailable.*

Mark	No.	Description	Part No.
	1	Screw	BPZ26P080FMC
◉	2	Key Board Unit(KEH-M9741ZT KEH-M9741ZT-02)	CWM1586
◉		Key Board Unit(KEH-9641ZT KEH-9641ZT-02)	CWM1585
‡‡	3	Lamp	CEL1063
	4	Holder	CNV1906
	5	Rubber	CNV1888
	6	Conductor	
‡‡	7	Lamp	CEL1124
	8	Spacer	
	9	Spacer	
	10	Sheet	
‡‡	11	Lamp (KEH-M9741ZT KEH-M9741ZT-02)	CEL1128
	12	Holder(KEH-M9741ZT KEH-M9741ZT-02)	CNV1906
‡‡	13	Lamp	CEL1128
	14	Rubber	CNV1887
	15	Conductor	
‡	16	Button(EJECT)	CAC1689
‡	17	Button(AM)	CAC1572
‡	18	Button(FM1/2) (KEH-M9741ZT KEH-M9741ZT-02)	CAC1575
‡		Button(FM1) (KEH-9641ZT KEH-9641ZT-02)	CAC1573
‡	19	Button(TAPE) (KEH-M9741ZT KEH-M9741ZT-02)	CAC1576
‡		Button(FM2) (KEH-9641ZT KEH-9641ZT-02)	CAC1574
‡	20	Button(CD) (KEH-M9741ZT KEH-M9741ZT-02)	CAC1680
‡		Button(TAPE) (KEH-9641ZT KEH-9641ZT-02)	CAC1576
	21	Spacer	
	22	Holder	CNV1996
‡	23	Button(TUNE)	CAC1700
	24	Screw	PMS30P050FMC
	25		·····
	26	Spring	CBH1214
	27	Door(KEH-M9741ZT)	CAT1211
		Door(KEH-M9741ZT-02)	CAT1210
		Door(KEH-9641ZT)	CAT1209
		Door(KEH-9641ZT-02)	CAT1165
	28	Lens	CNV1581
	29	Lens	CNV1908
	30	Lens	CNV1795
	31	Conductor	
	32	Conductor Unit	
	33	Holder	
‡	34	Knob	CAA1193
	35	Grille Assy(KEH-M9741ZT)	CXA2949
		Grille Assy(KEH-M9741ZT-02)	CXA2291
		Grille Assy(KEH-9641ZT)	CXA2248
		Grille Assy(KEH-9641ZT-02)	CXA2290
‡	36	Button(SCAN)	CAC1565
‡	37	Button(1)	CAC1566
‡	38	Button(2)	CAC1567
‡	39	Button(3)	CAC1568
‡	40	Button(4)	CAC1569
‡	41	Button(5)	CAC1570
‡	42	Button(6)	CAC1571
‡‡	43	Lamp	CEL1098
	44	P.C.Board	CNP1630
	45	P.C.Board	CNP1632
	46	P.C.Board	CNP2180
	47	Holder	CNV1587
	48	Lens	CNV1580
	49	Sheet	CNM2420
	50	Plate	
	51	LCD	CAW1044
◉	52	Volume Unit	CWM1874
	53	Connector	CKS1525
‡‡	54	Volume	CCS1106
	55	Nut	CBA-066
	56	Lens	CNV1584
	57	Sheet	
‡	58	Knob	CAA1156
	59	Sheet	CNM2362
	60	Cover	
	61	Screw	BMZ26P050FMC
	62	Holder	
◉	63	Cassette Mechanism Assy	CXK1685
	64	Arm	
	65	Washer	CBF-046
	66	Cover(KEH-9641ZT KEH-9641ZT/02)	
	67	Connector	CKS1529
‡‡	68	Volume	CCS1119
	69	Holder	
	70	Spacer	

- **Chassis (1)**

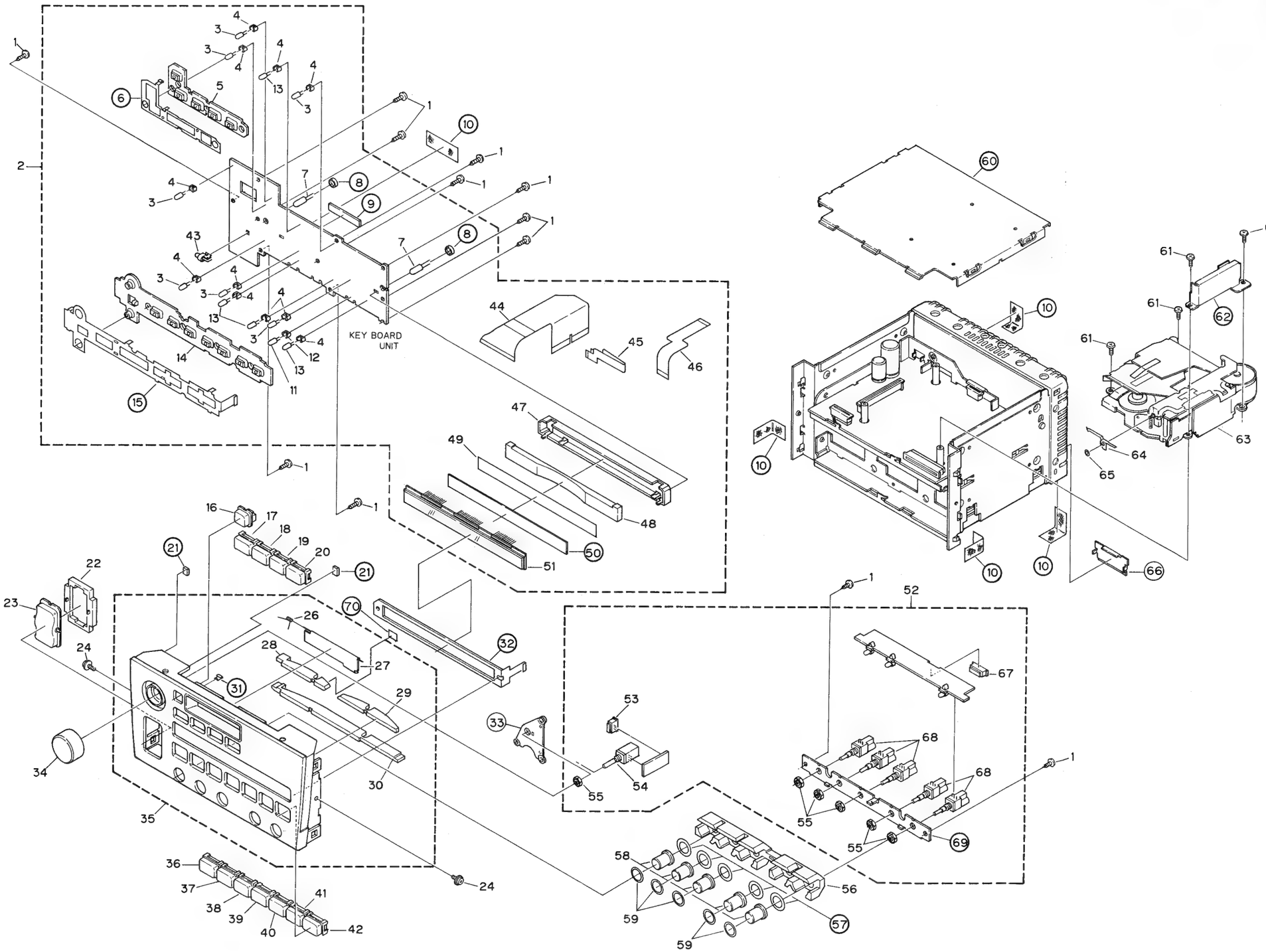

Fig. 69

12. CHASSIS EXPLODED VIEW (2)

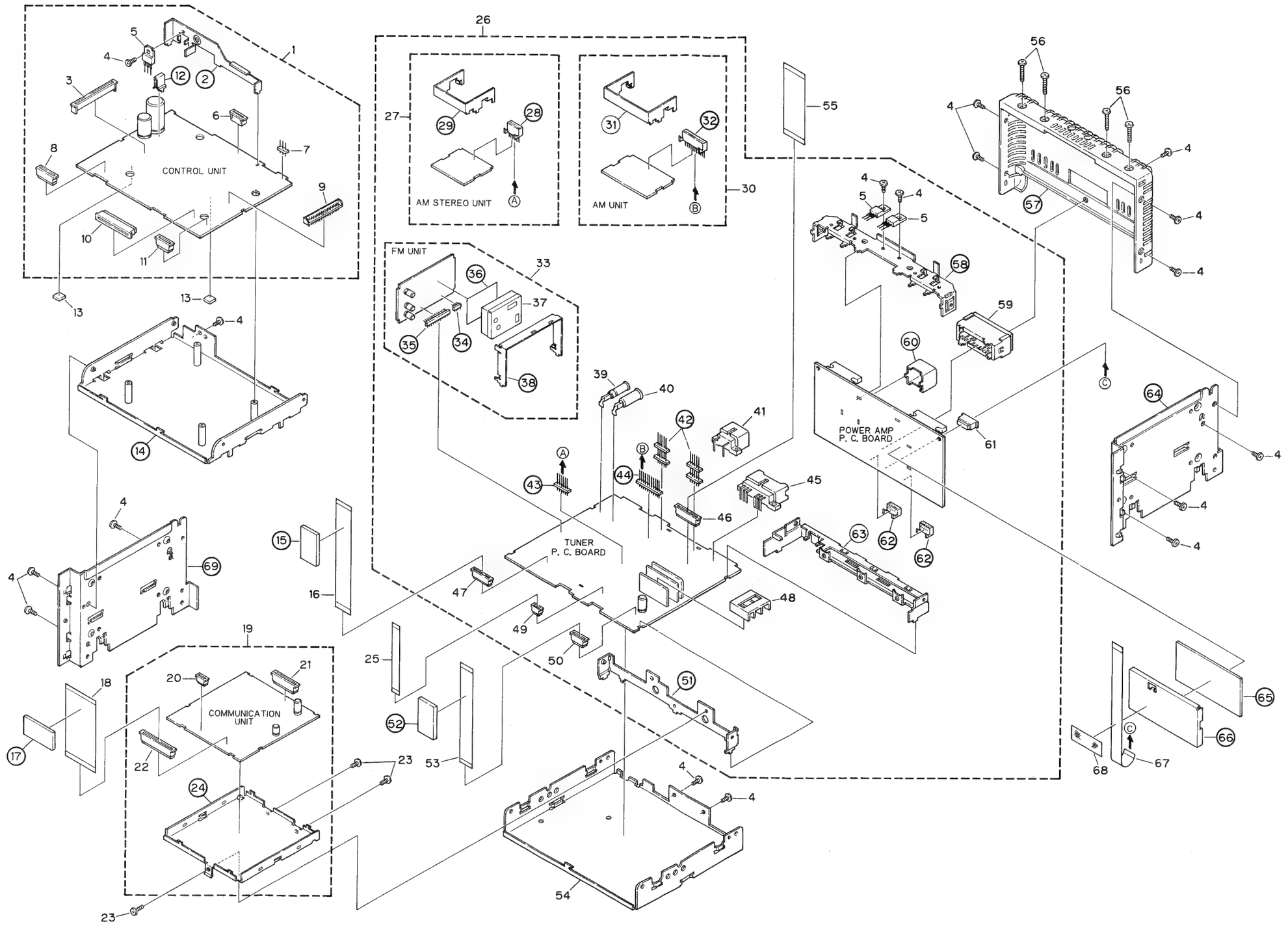

Fig. 70

• Parts List

Mark	No.	Description	Part No.
◉	1	Control Unit (KEH-M9741ZT KEH-M9741ZT-02)	CWM1571
◉		Control Unit (KEH-9641ZT KEH-9641ZT-02)	CWM1570
	2	Holder	
	3	Connector	CKS1389
	4	Screw	BMZ30P060FMC
**	5	Transistor	2SB942
	6	Connector	CKS1561
	7	Plug	CKS-291
	8	Connector	CKS1567
	9	Plug	CKS-659
	10	Connector (KEH-M9741ZT KEH-M9741ZT-02)	CKS1551
	11	Connector (KEH-9641ZT KEH-9641ZT-02)	CKS1563
	12	Holder	
	13	Cushion	CNM2374
	14	Chassis Assy	
	15	Cushion	
	16	Connector	CDE1948
	17	Cushion (KEH-M9741ZT KEH-M9741ZT-02)	
	18	Connector (KEH-M9741ZT KEH-M9741ZT-02)	CDE1950
◉	19	Communication Unit (KEH-M9741ZT KEH-M9741ZT-02)	CWM1566
	20	Connector (KEH-M9741ZT KEH-M9741ZT-02)	CKS1557
	21	Connector (KEH-M9741ZT KEH-M9741ZT-02)	CKS1573
	22	Connector (KEH-M9741ZT KEH-M9741ZT-02)	CKS1583
	23	Screw (KEH-M9741ZT KEH-M9741ZT-02)	BMZ30P060FMC
	24	Case (KEH-M9741ZT KEH-M9741ZT-02)	
	25	Connector (KEH-M9741ZT KEH-M9741ZT-02)	CDE2194
◉	26	Tuner Amp Unit (KEH-M9741ZT)	CWM1832
◉		Tuner Amp Unit (KEH-M9741ZT-02)	CWM1558
◉		Tuner Amp Unit (KEH-9641ZT)	CWM1831
◉		Tuner Amp Unit (KEH-9741ZT-02)	CWM1557
◉	27	AM Stereo Unit	CWA1025
	28	Connector	
	29	Holder	
◉	30	AM Unit	CWA1021
	31	Holder	
	32	Connector	
◉	33	FM Unit	CWE1131
	34	Connector	
	35	Connector	
	36	Insulator	
	37	FM Front End	CWB1039
	38	Holder	
	39	Antenna Jack	CKX1005
	40	Antenna Jack	CKX1006
	41	Connector	CKM1048
	42	Plug	
	43	Plug	
	44	Plug	
	45	Connector (KEH-M9741ZT KEH-M9741ZT-02)	CKM1025
	46	Connector (KEH-M9741ZT KEH-M9741ZT-02)	CKS1573
	47	Connector	CKS1567
	48	Holder	CNV2155
	49	Connector (KEH-M9741ZT KEH-M9741ZT-02)	CKS1557
	50	Connector (KEH-9641ZT KEH-9641ZT-02)	CKS1567
	51	Holder	
	52	Cushion (KEH-9641ZT KEH-9641ZT-02)	
	53	Connector (KEH-9641ZT KEH-9641ZT-02)	CDE1949
	54	Chassis	
	55	Connector (KEH-M9741ZT KEH-M9741ZT-02)	CDE2193
	56	Screw	BMZ30P120FMC
	57	Heat Sink	
	58	Holder	
	59	Connector	CKM1047
	60	Shield Case	
	61	Connector	CKS1561
	62	Connector	
	63	Holder	
	64	Side Panel	
	65	Cushion	
	66	Holder	
	67	Connector	CDE1952
	68	Sheet	
	69	Side Plate	

13. CASSETTE MECHANISM ASSY EXPLODED VIEW

- **Parts List**

Mark	No.	Description	Part No.
	1	Screw(M1.4×1.4)	HBA-147
	2	Screw	BMZ20P040FMC
	3	Bush	CLB-663
	4	Spring	CBE-119
	5	Spring	CBH-867
	6	Spring	CBH-837
	7	Arm	CNC2373
	8	Holder Unit	CXA2821
	9	Gear Unit	CXA2088
	10	Washer	CBF1026
	11	Gear	CNY-271
	12	Washer	CBF-126
	13	Spring	CBH-835
	14	E Type Washer	CBG1003
	15	Spring	CBH1277
**	16	Pinch Roller Unit	CXA2608
	17	Spring	CBH1197
	18	E Type Washer	YE25FUC
	19	Arm	CNV1254
	20	Washer	CBF1022
	21	Collar	CNW-932
	22	Spring	CBH-827
**	23	Reel Unit	CXA2089
	24	Spring	CBH-868
	25	Bracket Unit	CXA1481
	26	F/R Gear	CNW-944
	27	Screw	CBA1106
**	28	Switch(70μS,CST IN)	CSN1003
	29	Screw(M1.7×5.5)	CBA1025
	30	P.C.Board	
**	31	Switch(CST SET)	CSN-089
	32	Screw(M1.7×3)	CBA-186
	33	Magnetic Resistive Device	SDME106B
	34	Washer	CBF-046
	35	Spring	CBH-887
	36	Spring	CBH-886
	37	Gear	CNV1075
	38	Screw(M2×5)	CBA1054
	39	Arm Unit	CXD-389
	40	Arm	
	41	Washer	HBF-179
	42	Lever	CNV1257
	43	Spring	CBH1196
**	44	Motor(Capstan)	CXM1007
	45	Chassis Unit	

Mark	No.	Description	Part No.
	46	Screw	PMS26P025FMC
	47	Spring	CBH-830
	48	Screw(M2×2.5)	HBA-175
	49	Spacer	
	50	Spring	CBL1050
	51	Washer	CBF1025
	52	Washer	CBF-126
	53	Spring	CBH-893
	54	Collar	CLA1110
	55	Screw	BMZ20P025FMC
	56	Gear	CNV1616
	57	Collar	CLA1238
	58	Flywheel	CNV1572
**	59	Belt	CNT-111
	60	Insulator	
	61	Insulator	
	62	Cover	
	63	Screw	BMZ20P030FMC
	64	Screw(M1.7×5.5)	CBA-172
	65	Holder	
	66	Screw(M2×25)	CBA-165
	67	Guide	
	68	Spacer	
	69	Switch	CSN1005
**	70	Motor Unit (FF/REW.Head Positio)	CXA2429
	71	Screw	HBA-174
	72	Bracket Unit	
	73	Pinch Roller Unit	CXA2609
	74	Screw(M2×2.5)	CBA1037
	75	Pulley	CNV1255
**	76	Belt	CNT1010
	77	.....	
	78	.....	
	79	Pulley	CNV1256
	80	Screw(M2×5)	CBA1054
	81	Bracket Unit	
	82	Cover	
	83	Screw(M1.4×8)	CBA1055
	84	Spring	CBE-114
	85	Azimuth Rubber	CNY-134
**	86	Head Unit	CXA2490
	87	Spring	CBH-829
	88	Gear	CNW-939
	89	E Type Washer	YE12FUC
	90	Gear	CNV1262

14. ELECTRICAL PARTS LIST

NOTE:

- *For your parts Stock Control, the fast moving items are indicated with the marks ‡‡ and ‡.*
  ‡‡ : GENERALLY MOVES FASTER THAN ‡.
  This classification shall be adjusted by each distributor because it depends on model number, temperature, humidity, etc.
- *Parts whose parts numbers are omitted are subject to being not supplied.*
- *The part numbers shown below indicate chip components.*
  Chip Resistor
  RS1/8S □□□J, RS1/10S □□□J
  Chip Capacitor (except for CQS.....)
  CKS....., CCS....., CSZS.....

Unit Number :
Unit Name : AM Unit

MISCELLANEOUS

Mark	Circuit Symbol & No.	Part Name	Part No.
**	IC 201		KHA507A
**	IC 202		LA1136N
**	Q 201		2SK435
**	Q 202		2SC2458
*	D 201	Variable Capacitance Diode	KV1280F1-2
*	D 202 203		1SS133
	L 201	Micro-Inductor	LAUR68M
	L 202	Ferri-Inductor	LAU680K
	T 201	Coil	CTB1051
	T 202	Coil	CTB-171
	T 203	Coil	CTB1044
	T 204	Coil	CTB1026
	T 205	Coil	CTE1030
	T 206	Coil	CTE1033
	T 207	Coil	CTB1043
	CF 201	Ceramic Filter	CTF1074
	CF 203	Ceramic Resonator	CTF1039

RESISTORS

Mark	Circuit Symbol & No.	Part Name	Part No.
	R 201		RS1/10S682J
	R 202		RS1/10S471J
	R 203 218		RS1/10S220J
	R 204		RS1/10S330J
	R 205 210 212 213 217		RS1/10S103J
	R 206		RS1/10S394J
	R 207		RS1/10S472J
	R 209		RD1/4PS472JL
	R 211		RS1/10S223J
	R 214		RS1/10S473J
	R 215		RS1/10S101J
	R 216		RS1/10S562J
	R 219 220		RS1/10S104J

CAPACITORS

Mark	Circuit Symbol & No.	Part Name	Part No.
	C 201 205 206 211 213 221 222		CKSQYB223K25
	C 202 228		CEA470M16LS
	C 203 225		CCSQCH220J50
	C 204		CEA010M50LS2
	C 207 210		CCSQCH100D50
	C 208		CKSQYB333K25
	C 209		CCSQCH010C50
	C 212 220		CEAR47M50LS2
	C 215		COMA393J50
	C 216		COMA223J50
	C 217		CKSQYB103K50
	C 218		CEA3R3M50LS
	C 219		CEA4R7M35LS
	C 223		CQPA751G2A
	C 224		CCSQCH470J50
	C 226		CCSQCH680J50
	C 227		CCSQCH680J50
	C 229		CCSQCH180J50

Unit Number :
Unit Name : AM Stereo Unit

MISCELLANEOUS

Mark	Circuit Symbol & No.	Part Name	Part No.
**	IC 251		TK13020D
*	D 251 252		1SS133
	X 251	Ceramic Resonator	CSS-041

RESISTORS

Mark	Circuit Symbol & No.	Part Name	Part No.
	R 251		RS1/10S393J
	R 252 254 265 266		RS1/10S152J
	R 253 255		RS1/10S223J
	R 256		RS1/10S823J
	R 257 258		RS1/10S222J
	R 259 260 272 273		RS1/10S333J
	R 261 262 274 275		RS1/10S0R0J
	R 263		RS1/10S471J
	R 264		RS1/10S272J
	R 267		RS1/10S751J
	R 268		RS1/10S304J
	R 269		RS1/10S563J
	R 270		RS1/10S332J
	R 271		RS1/10S561J

CAPACITORS

Mark	Circuit Symbol & No.	Part Name	Part No.
	C 251 259 260 270		CKSQYB103K50
	C 252 253 255 272 273		CKSQYB332K50
	C 254 266		CEA100M16LS2
	C 256 257		CEA010M50LS2
	C 258 265		CEA2R2M50LS2
	C 261 262		COMA563J50
	C 263		CEA470M16LS
	C 264		CEA4R7M35LS
	C 267 268		CSZAR47M35
	C 269		CCG-106
	C 271		CEA330M16LS
	C 274 275		CEAR15M50LS2

Unit Number :
Unit Name : FM Unit

MISCELLANEOUS

Mark	Circuit Symbol & No.	Part Name	Part No.
**	IC 51		KHA141A
**	IC 101		KHA146
**	Q 51	Chip Transistor	DTC124EK
**	Q 81 84	Chip Transistor	2SA1162
**	Q 82 83	Chip Transistor	2SC3295
*	D 81	Chip Diode	MA153-MC
*	D 82	Chip Diode	MA151K-MH
	L 11	Chip Inductor	CTF1086
	L 51	Inductor	LAU150K
	T 51	Coil	CTC1029
	CF 51	Ceramic Filter	CTF-182
**	VR 51	Semi-fixed 22kΩ (B)	VRTB4VS223
**	VR 52	Semi-fixed 10kΩ (B)	VRTB4VS103
**	VR 53	Semi-fixed 33kΩ (B)	VRTB4VS333
**	VR 101 152	Semi-fixed 15kΩ (B)	VRTB4VS153
		FM Front End	CWB1039

RESISTORS

Mark	Circuit Symbol & No.	Part Name	Part No.
	R 6 52		RS1/10S331J
	R 7		RS1/10S103J
	R 51 72		RS1/10S0R0J
	R 53		RS1/10S472J
	R 58		RS1/10S332J
	R 81 82 89		RS1/10S223J
	R 83		RS1/10S222J
	R 84		RS1/10S272J
	R 85 87		RS1/10S182J
	R 86		RS1/10S680J
	R 88		RS1/10S105J
	R 101		RS1/10S332J
	R 102		RS1/10S392J
	R 103		RS1/10S183J
	R 152		RS1/10S203J
	R 154		RS1/10S223J
	R 156 157		RS1/10S272J

CAPACITORS

Mark	Circuit Symbol & No.	Part Name	Part No.
	C 1		CKSQYB103K50
	C 3 12		CKSQYB102K50
	C 57 62		CEA010M50LS
	C 60 99 132		CKSQYF473Z50
	C 63		CEA4R7M16NPLL
	C 70		CCSQCH180J50
	C 81		CKSYB104K25
	C 82		CEA010M50LS2
	C 84	33μF/2V	CCH1055
	C 103 105		CEA470M16LS
	C 154		CKSQYB472K50
	C 158		CEA0R1M50LS2
	C 159 160		CKSQYB273K50
	C 161		CEA101M10LS

Unit Number :
Unit Name : Communication Unit(KEH-M9741ZT KEH-M9741ZT-02)

MISCELLANEOUS

Mark	Circuit Symbol & No.	Part Name	Part No.
**	IC 751		PD5094
**	IC 752		MSM82C51A-2RS-H
**	IC 753		CWV1002
**	IC 755		ON3111
**	Q 751		DTC114ES
**	Q 752		DTA114ES
**	Q 753 836		2SD1859
*	D 751 752		ERA15-02VH
*	D 836		1SS133
*	D 837		RD9R1JSB1
	L 751	Ferri-Inductor	CTF-157
	L 836 837	Coil	CTF1070
	IB 751		CWW1271
	IB 752 756		CWW1240
	IB 753		CWW1230
	IB 754 755		CWW1241
	X 751	Ceramic Resonator	CSS1051

RESISTORS

Mark	Circuit Symbol & No.	Part Name	Part No.
	R 753 755 757 759 761 763 765 767 768 769		RS1/10S102J
	R 760 770 771 794		RS1/10S102J
	R 772 789 792		RS1/10S473J
	R 773		RD1/4PS103JL
	R 774		RD1/4PS223JL

• Cassette Mechanism Assy

Mark	No.	Description	Part No.
	91	Holder Assy	CXA1546
	92	Spring	CBH1276
	93	Arm	CNV1495
	94	E Type Washer	YE15FUC
	95	P. C. Board	CNP1227
	96	P. C. Board	CNP1738
	97	P. C. Board	
	98	Connector (6P)	CKS1075
	99	Connector (4P)	CKS1073
	100		·····
	101	Arm	CNH-004
	102	Holder Assy	CXA1548
	103	Screw (M2 × 2)	HBA-209
	104	Connector (20P)	CKS-678
	105	Screw (M2 × 2 × 3)	CBA1022
*	106	Diode	1S1555
	107	P. C. Board	CNP1737
	108	Arm	CNV1253
	109	Screw (M2 × 7)	CBA1060
	110	Screw (M2 × 4)	CBA1015
	111	Screw (M2 × 2. 5)	CBA1041
	112	Insulator	

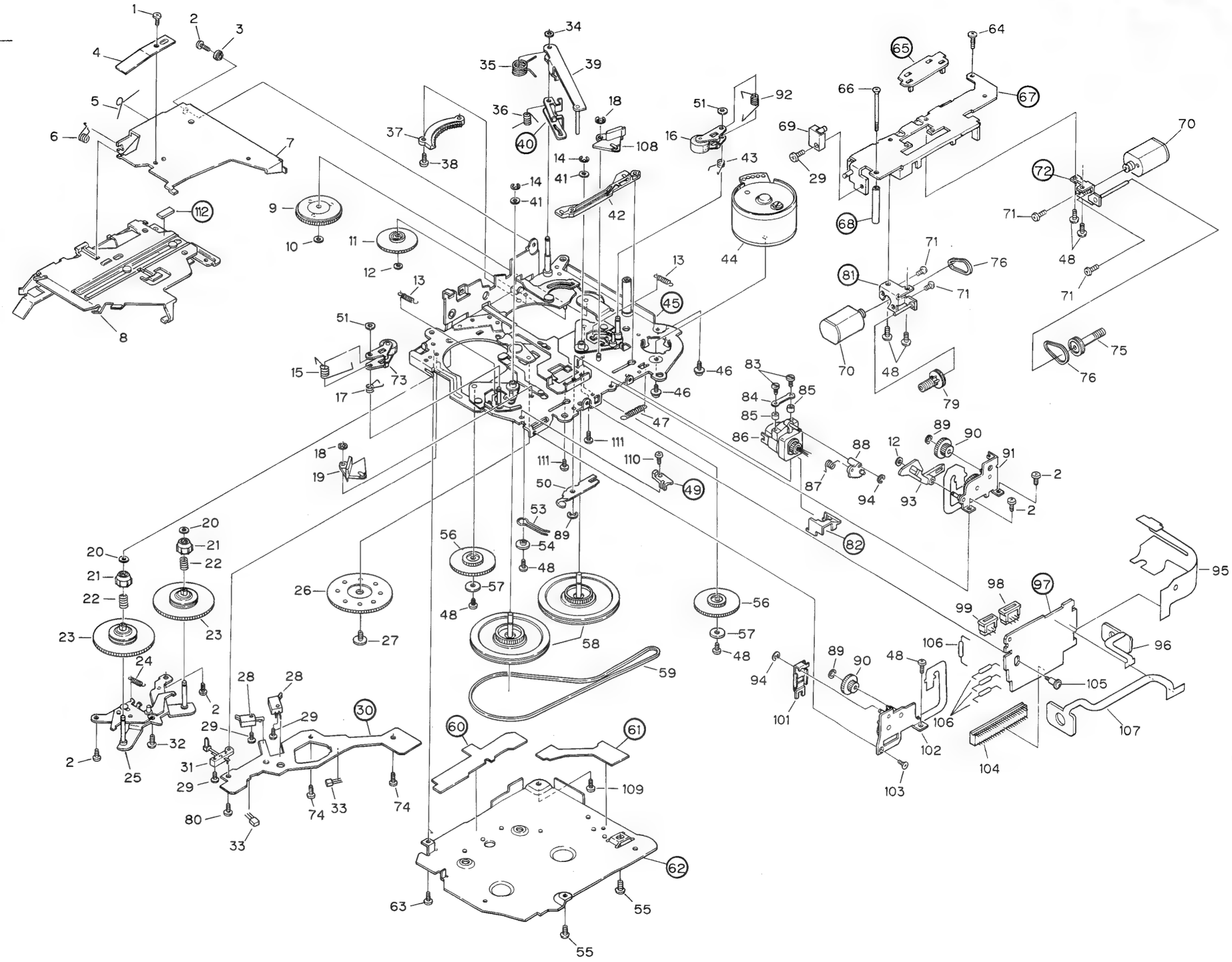

Fig. 71

Mark	Circuit Symbol & No.	Part Name	Part No.
	R 775 799		RD1/2PS121JL
	R 776		RD1/4PS222JL
	R 777		RD1/4PS331JL
	R 778		RD1/4PS562JL
	R 784		RD1/4PS682JL
	R 785 786 787		RD1/4PS122JL
	R 790		RS1/10S471J
	R 791		RS1/10S105J
	R 793		RD1/4PS473JL
	R 795 796 837		RD1/4PS102JL
	R 797 798 836		RD1/4PS471JL

CAPACITORS

Mark	Circuit Symbol & No.	Part Name	Part No.
	C 751 772		CKSYB473K50
	C 752 754 758		CKSQYB102K50
	C 755 756		CCSQCH101J50
	C 757		CCSQCH330J50
	C 773		CEA101M10LS
	C 774		CASA010M16
	C 836		CEA470M16LS
	C 837 839		CKPYY103M16L
	C 838		CEA221M10L2

Unit Number :
Unit Name : Control Unit

MISCELLANEOUS

Mark	Circuit Symbol & No.	Part Name	Part No.
**	IC 501		KHA147A
**	IC 701		PD4167B
**	IC 702		PDH001
**	IC 703		M51957BL
**	IC 704		CWV1001
**	IC 705		TC4028BP
**	IC 706 812 851		DT5C144E
**	IC 707 708		MB88306P
**	IC 709		TC35095P
**	IC 710		CWW1178
**	IC 811		KHA241
**	Q 501 703 831 832 833 852 867 869		DTC144ES
**	Q 502		DTA144ES
**	Q 701 702 816 817		2SC2458
**	Q 811		2SB942
**	Q 812		2SC3474
**	Q 813		2SD1859
**	Q 814 815		DTC144TS
**	Q 818 819 825 830 868		2SB1243
**	Q 823 824		DTB133HV
**	Q 826 834		DTC114ES
**	Q 827 828 829		2SB1243
**	Q 851 863 864 865 870		DTB113ZV
**	Q 853 854 855 856 857 858 859 861		2SD1859
**	Q 860	(KEH-M9741ZT KEH-M9741ZT-02)	2SD1859
**	Q 866	(KEH-M9741ZT KEH-M9741ZT-02)	DTB113ZV
*	D 501 702 708 709 710 711 712 713 714		1SS133
*	D 701	(KEH-M9741ZT KEH-M9741ZT-02)	1SS133
*	D 707		HZ3LLB
*	D 718 719		RD7R5JSB3
*	D 811		RD6R2JSB1
*	D 812		ERA15-02VH
*	D 813		HZ6LB1
*	D 814		RD5R6JSB2
*	D 853		RD5R1JSB1
	L 701	Ferri-Inductor	CTF-157
	L 702	Ferri-Inductor	LAU150K
	IB 701		CWW1048
	IB 702 703		CWW1230
	IB 704		CWW1231
	IB 705 706 709 710		CWW1233
	IB 707		CWW1153
	IB 708		CWW1126
	IB 851		CWW1232
	X 701	Crystal Resonator	CSS1029
**	VR 501 502	Semi-fixed 470Ω (B)	VRT86VS471

RESISTORS

Mark	Circuit Symbol & No.	Part Name	Part No.
	R 501 502 702 703 704 734 735 853 870 871		RD1/4PS473JL
	R 503 813 818 822 833 869		RD1/4PS103JL
	R 504 820 824 827 829		RS1/10S103J
	R 505		RD1/4PS101JL
	R 506 705 708 709 710 711 713 714 715 742		RD1/4PS102JL
	R 701		RS1/10S105J
	R 706 707 718 738 740 930 935 937 946 948		RS1/10S473J
	R 712 729 730 731 732		RS1/10S222J
	R 716 717 719 728 814		RD1/4PS471JL
	R 720	(KEH-M9741ZT KEH-M9741ZT-02)	RD1/4PS471JL
	R 720	(KEH-9641ZT KEH-9641ZT-02)	RD1/4PS0R0JL
	R 721 722 723 724 725 726 727 819 821 823		RD1/4PS222JL
	R 733	(KEH-M9741ZT KEH-M9741ZT-02)	RD1/4PS104JL
	R 733	(KEH-9641ZT KEH-9641ZT-02)	RD1/4PS0R0JL
	R 736 815 816 817 931 932 934 938 942 943		RS1/10S104J
	R 737 739 741 743 745 746 747 748 749 923		RS1/10S102J
	R 744 922 925		RS1/10S471J
	R 811		RD1/4PS223JL
	R 812		RS1P150JL
	R 825 851 852 933 961 962 966		RD1/4PS222JL
	R 826 828 832 926 939 950 951 952 953 954		RD1/4PS102JL
	R 859 860 863 864 865		RD1/4PS8R2JL
	R 861 862		RD1/4PS9R1JL
	R 866	(KEH-M9741ZT KEH-M9741ZT-02)	RD1/4PS130JL
	R 867		RD1/4PS6R8JL
	R 868		RD1/4PS221JL
	R 872		RD1/4PS473JL
	R 924 927 928 929		RS1/10S102J
	R 936		RS1/10S223J
	R 940 941		RD1/4PS104JL
	R 944 945 947 949 963 965 967 968		RS1/10S104J
	R 955 956 957		RD1/4PS102JL
	R 960		RS1/10S473J
	R 969		RS1/10S474J

CAPACITORS

Mark	Circuit Symbol & No.	Part Name	Part No.
	C 501 502		CKPYB681K50L
	C 503 504		CEANL4R7M35LL
	C 505 506 718 719		CEA470M6R3LS
	C 507 508		CEA010M50NPLL
	C 509		CEA010M50LS2
	C 510		CEA221M10L2
	C 511		CEA470M16L2
	C 512		CEA101M10LS
	C 701 702		CCSQCH330J50
	C 703 716 813 818 822 824 835 875		CKSYB473K50
	C 704 705		CASA010M16
	C 706 712 713 717		CKSQYF473Z25
	C 707		CEAR22M50L2
	C 708		CEANL3R3M50LL
	C 709		CQEA223J50
	C 710		CQMA103J50LL
	C 714 715 817 832 851 950 953 954		CKPYY103M16L
	C 720 833 834 955		CKSQYB103K50
	C 811	470μF/16V	CCH-114
	C 812 816		CEA100M16L2
	C 814 825		CEA010M50L2
	C 815	4700μF/16V	CCH1061
	C 819 823		CEA101M10L2
	C 820	2200μF/16V	CCH1001
	C 821		CEA470M16LS
	C 874		CEA100M25L2

Unit Number :
Unit Name : Key Board Unit

MISCELLANEOUS

Mark	Circuit Symbol & No.	Part Name	Part No.
**	IC 901		LC7582P
**	Q 901 902 903		2SD1226MF
**	IL 901 903 904 905 918	Lamp 8V 60mA	CEL1063
**	IL 902 915 916 917	Lamp 8V 60mA	CEL1128
**	IL 908 911	Lamp 8V 100mA	CEL1124
**	IL 919	Lamp 8V 60mA	CEL1098
**	IL 920 921	Lamp 8V 60mA	CEL1063
**	IL 922 (KEH-M9741ZT KEH-M9741ZT-02)	Lamp 8V 60mA	CEL1128
		LCD	CAW1044

RESISTORS

Mark	Circuit Symbol & No.	Part Name	Part No.
	R 901		RD1/4PS473JL
	R 902 903 904 905		RD1/4PS102JL
	R 906 907 908		RD1/4PS8R2JL

CAPACITORS

Mark	Circuit Symbol & No.	Part Name	Part No.
	C 901		CKPYB681K50L
	C 902		CKPYY103M16L
	C 903		CKPYB102K50L

Unit Number :
Unit Name : Tuner Amp Unit

Tuner Amp Unit
Consists of
• Tuner P.C.Board
• Power Amp P.C.Board

MISCELLANEOUS

Mark	Circuit Symbol & No.	Part Name	Part No.
**	IC 26		KHA168
**	IC 27		PA5011
**	IC 451		CX-7925B
**	IC 551		CWV1004
**	IC 552		KHA163
**	IC 553	(KEH-M9741ZT KEH-9641ZT)	KHA222B
**	IC 553	(KEH-M9741ZT-02 KEH-9641ZT-02)	KHA249B
**	IC 555		KHA233
**	IC 556	(KEH-M9741ZT KEH-M9741ZT-02)	KHA232A
**	IC 601 602		TA8221H
**	IC 603		KHA229
**	IC 604		M51957BL
**	Q 61 454		2SC3113
**	Q 163 164 883 884 886 887 888 890		2SC2458
**	Q 452		2SK330
**	Q 456 457 878 879 880		DTA114ES
**	Q 458 803		DTC124ES
**	Q 551		2SC2872S
**	Q 601 602		2SC3665
**	Q 802		2SB1243
**	Q 804		DTB114ES
**	Q 876 877		2SC1740S
**	Q 881 882		2SB942
**	Q 885		2SA1048
**	Q 889 891		2SD1859
*	D 26 27		1SV99
*	D 28 61 161 162 454 601 602 802 879 885		1SS133
*	D 455		RD2R7ESB1
*	D 551		RD5R1JSB2
*	D 603		MA204WK
*	D 876 878		5Z27LC
*	D 877		SM-3-08LFEA
*	D 880		RD8R2JSB2
*	D 881 883		MTZ18JB
*	D 884 887		MA206
*	D 886		RD8R1JSB2
*	D 889		HZ2CLL
*	D 890		RD9R1JSB2
	L 26	Ferri-Inductor	LAU1R0M
	L 451	Ferri-Inductor	LAU1R0K
	L 876	Choke Coil	CTH1069
	L 877	Coil	CTF-135
	L 878	Coil	CTH1170
	T 26	Transformer	CTC-195
	CG 26 27		DSP-10 1M-S008
	CR 26		CWW1145
	X 451	Crystal Resonator	CSS1031
**	VR 551	Semi-fixed 10kΩ (B)	VRT8VS103
**	FU 601 602	Fuse 6.3A	CEK1108

RESISTORS

Mark	Circuit Symbol & No.	Part Name	Part No.
R	26		RD1/4PS681JL
R	28 458 461 558 591 657 886		RD1/4PS102JL
R	29 660 661 877 879 892 894		RD1/4PS223JL
R	32		RD1/4PS0R0JL
R	61 882 883		RD1/4PS104JL
R	62 188 559 560 579 603 604 621 890		RD1/4PS103JL
R	63		RD1/4PS123JL
R	64 65 468 469		RD1/4PS0R0JL
R	161 162 163 164 171 172 189 250		RD1/4PS222JL
R	169 170		RD1/4PS333JL
R	173		RD1/4PS100JL
R	190 625		RD1/4PS391JL
R	451 452 453 888		RD1/4PS471JL
R	454 887 898		RD1/4PS332JL
R	459 460 557		RD1/4PS272JL
R	462 655		RD1/4PS152JL
R	463 592 601 602 611 612 622 630 631 876		RD1/4PS472JL
R	470 590 623 624 626 632 633 656 805 807		RD1/4PS473JL
R	553 554 659 803 893		RD1/4PS222JL
R	551 552	(KEH-M9741ZT KEH-M9741ZT-02)	RD1/4PS272JL
R	555 556 808		RD1/4PS562JL
R	567 568 569 570		RD1/4PS823JL
R	571 572		RD1/4PS152JL
R	573 574		RD1/4PS182JL
R	605 606 613 614		RD1/4PS122JL
R	607 608 609 610 615 616 617 618		RD1/4PS2R2JL
R	619		RD1/4PS153JL
R	620		RD1/4PS331JL
R	651 652		RD1/2PS010JL
R	653		RD1/4PS682JL
R	654		RD1/2PS181JL
R	658		RS1P101JL
R	662 664 804 806		RD1/4PS221JL
R	663		RD1/4PS0R0JL
R	665		RD1/4PS821JL
R	809		RD1/4PS561JL
R	880		RD1/4PS472JL
R	881		RD1/4PS183JL
R	884		RD1/4PS184JL
R	885		RD1/4PS303JL
R	887		RD1/4PS103JL
R	889 896		RD1/4PS101JL
R	891 895 899		RD1/4PS103JL
R	897		RD1/4PS473JL

CAPACITORS

Mark	Circuit Symbol & No.	Part Name	Part No.
C	26 32 34 62 64 163 166 170 171 186		CKPYY103M16L
C	27		CCPCH100J50L
C	28 63 568 569 570 609 610 623 624		CKPYB102K50L
C	29 33 633 886		CEA100M16L2
C	30 552		CEA220M10L2
C	31		CKPYB471K50L
C	61 324 452 456 590 591 806		CGCYX473K25
C	167 168 554		CEA010M50NPLL
C	169 566 567		CEA101M10L2
C	185		CEAR15M50LS2
C	451 465 466		CEA470M16L2
C	453		CGCYX103K25
C	454		CCCCH180J50
C	455		CCCCH090D50
C	459	4.7μF/16V	CCH1005
C	460		COMA103J50
C	461		CKCYB102K50
C	463 467 592 593 605 606 807 808 809		CKPYY103M16L
C	464		CEA2R2M50LS2
C	551 553		CEA471M10L2
C	555 556 557 558 562 563 564 565		CQEA184J63
C	571 572 888		CEA2R2M35NPLL
C	601 602 617 618		CEA2R2M35NPLL
C	603 604 619 620 880		CEA2R2M50L2
C	607 608 621 622		CEA220M16L2
C	611 612 613 614 625 626 627 628		CQEA154J63
C	615 616 629 630	470μF/16V	CCH-114
C	631 632		CEA221M16L2
C	876 883	2200μF/16V	CCH1001
C	877 879 884 889 892 893		CGCYX473K25
C	878	1000μF/16V	CCH1003
C	885		CEA4R7M16NPLL
C	890		CEA100M25L2
C	891		CEA101M16L2

Unit Number :
Unit Name : Volume Unit

Volume Unit
Consists of • Volume P.C Board A • Volume P.C Board B

Mark	Circuit Symbol & No.	Part Name	Part No.
**	IL 912 913 914	Lamp 8V 40mA	CEL1114
**	VR 901 902 903 904 905	Volume	CCS1119
**	VR 906/S 901	Volume/Switch	CCS1106
	R 913		RD1/4PS102JL
	C 904		CEA220M10LS

Unit Number :
Unit Name : Switch P.C.Board

Mark	Circuit Symbol & No.	Part Name	Part No.
**	S 1	Switch(CST SET)	CSN-089
**	S 2 3	Switch(CST IN,70μs)	CSN1003
	MR 1 2	Magnetic Resistive Device	SDME106B

Unit Number :
Unit Name : P.C.Board Unit

Mark	Circuit Symbol & No.	Part Name	Part No.
*	D 1 2 3 4		1S1555

Miscellaneous Parts List

Mark	Circuit Symbol & No.	Part Name	Part No.
**	HD 1	Head Unit	CXA2490
**	M 1 2	Motor Unit (Head, FF/REW)	CXM2429
**	M 3	Motor (Capstan)	CXM1007
**	S 4	Switch (Door)	CSN1005